Contract

Among

COAL INDIA LIMITED, Kolkata

And

M/s Hitachi Construction Machinery Co., Ltd., Japan

And

M/s Tata Hitachi Construction Machinery Company Private Limited, Bengaluru

For

Supply, Installation and Commissioning of 2 nos. of 20 CuM Electric Hydraulic Face Shovels (Make: Hitachi, Model: EX3600E-6, 21 CuM) along with Consumable Spares and Consumables for warranty period of one year and Spares & Consumables for post warranty period of 7 years under Spares Cost Cap

Index		
A.	**CONTRACT FORM**	1-7
B.	**GENERAL CONDITIONS OF CONTRACT (GCC)**	8
1.	Definitions	9-10
2.	Application	10
3.	Standards	10
4.	Use of Contract Documents and Information	10-11
5.	Patent Rights	11
6.	Security Deposit	11
7.	Performance Bank Guarantee	11-12
8.	Inspection and Tests	12-13
9.	Packing and Marking	13
10.	Delivery and Documents	13-14
11.	Insurance	14-15
12.	Transportation	15
13.	Warranty	15-16
14.	Payment	16
15.	Changes in order	16
16.	Contract Amendments	16
17.	Assignment	16
18.	Subcontracts	16
19.	Delays in the Supplier's Performance	16
20.	Liquidated Damages	17
21.	Termination for Default and breach of contract	17-18
22.	Force Majeure	18-19
23.	Termination for Insolvency	19
24.	Termination for Convenience	19
25.	Governing Language	19
26.	Taxes and Duties	19-20
27.	Limitation of Liabilities	20
28.	Settlement of Commercial disputes in case of contracts with PSUs / Govt. Deptt.(s)	20
29.	Progress Report	20
30.	Provisions of CIL's Purchase Manual	20
31.	Applicable Law	20
32.	Jurisdiction of Courts	20
33.	Notices	20-21
C.	**SPECIAL CONDITIONS OF CONTRACT (SCC)**	22
1.	Security Deposit (GCC Clause 6)	23
2.	Performance Bank Guarantee (GCC Clause 7)	23-25
3.	Inspection and Tests (GCC Clause 8)	25-26
4.	Incidental Services	26-27
5.	Insurance(GCC Clause 11)	27
6.	Transportation (GCC Clause 12)	27
7.	Warranty (GCC Clause 13)	27
8.	Payment (GCC Clause 14)	27-31
9.	Prices	31-32
10.	Taxes and Duties (GCC clause 26)	32

11.	Changes in Order (GCC clause 15)	32
12.	Provisions of CIL's Purchase Manual	32
D.	**SCHEDULE OF REQUIREMENTS INCLUDING DELIVERY SCHEDULE**	33
1.	Schedule of Requirements with Delivery Schedule	34-35
2.	Schedule of Requirement of Services	36-37
E.	**TECHNICAL SPECIFICATIONS**	38
1.	Introduction	39
2.	Scope of supply (Part A)	40-41
3.	Specific Site Requirement (Part B)	42
4.	General Requirements (Part C)	43-52
5.	Equipment Specifications (Part D)	53-63
6.	Equipment Acceptance	64
F.	**PRICE SCHEDULE**	65-71
G.	**NOTIFICATION OF AWARD**	72-79
H.	**INTEGRITY PACT**	80-87
I.	**ANNEXURE(s)**	88
1(a) & (b).	Copies of Security Deposit Bank Guarantees submitted at CIL HQ	89-101
2.	Performance Bank Guarantee Format	102-103
3.	Proforma of Certificate after Commissioning of Equipment	104-105
4.	Bank Details of M/s Hitachi Construction Machinery Co., Ltd., Japan and M/s Tata Hitachi Construction Machinery Company Private Limited, Bengaluru	106-107
5	Format for 'No Claim / No Dispute Certificate' to be issued by Supplier	108-109
a to u	Annexures to Technical Specifications	110
a	List of Special Tools	111-115
b	Bought-out assemblies and sub-assemblies	116
c	Schedule of Oil, Lubricants and Fluids	117
d	Quality Assurance	118-121
e	Lubrication System	122-126
f	Automatic Fire Detection & Suppression System	127-137
g	Fire Extinguishers	138
h	Safety Features	139
i	Productivity & Health Monitoring System	140-191
j	Expected life of major assemblies	192
k	Details of erection programme	193
l	Volumetric rating of the bucket	194
m	Maximum bucket and arm cylinder digging forces	195
n	Schematic Drawing of the machine showing the position of the Center of Gravity and it's distance from the Central Axis of Rotation	196-197
o	Details of Electric Drive Control Systems	198-263
p	Calculation of determining the time for operating cycle	264
q	Detailed technical description of each system of excavator	265-267
r	Layout drawings and detailed description of all hydraulic system and components	268-289
s	Comprehensive commercial literature indicating therein complete technical specifications	290-300
t	Supplies undertaking for Supply of Operation and Maintenance Manuals	301
u	Shipping weight of all separate components	302-303

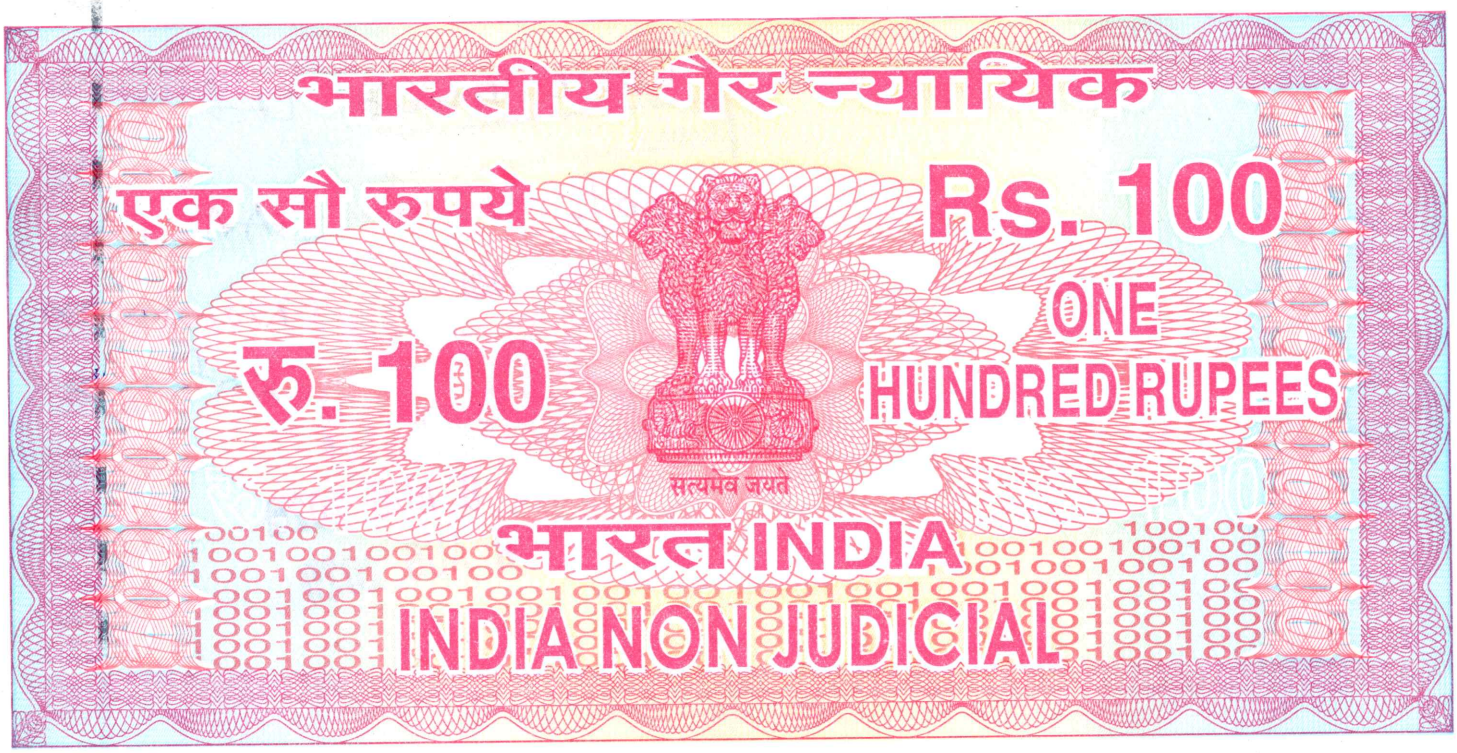

पश्चिमबङ्गा पश्चिम बंगाल WEST BENGAL AX 126232

Agreement

This Agreement made on the 12th day of August 2025 among Coal India Limited, Coal Bhawan, Premises No. 04, Plot No. AF-III, Action Area 1A, New Town, Rajarhat, Kolkata - 700156, India (hereinafter referred to as the "Purchaser" which expression shall unless repugnant to the context or meaning thereof, includes its successors) on the **FIRST PART**, M/s Hitachi Construction Machinery Co., Ltd., Ueno East Tower, 14th Floor, 2-16-1, Higashiueno, Taito-ku, Tokyo, Japan – 110-0015 (hereinafter referred to as Manufacturer/Supplier which expression shall unless repugnant to the context or meaning thereof, includes its successors and permitted Assigns) on the **SECOND PART**, and M/s Tata Hitachi Construction Machinery Company Private Limited, Jubilee Building, 45, Museum Road, Bangalore - 560025, India (Indian Subsidiary/Supplier which expression shall unless repugnant to the context or meaning thereof, includes its successors and permitted Assigns) on the **THIRD PART**.

WHEREAS the Purchaser invited bids for certain Goods and ancillary Services, viz Open Global e-Tender No. CIL/C2D/20 Cum EHF Shovel/R-151/394 dated 02.11.2023 and Tender ID: 2023_CILHQ_292777_1 for Supply, Installation and Commissioning of 2 nos. of 20 CuM Electric Hydraulic Face Shovels along with Consumable Spares and Consumables for 12 months of warranty period from the date of commissioning of the equipment and thereafter Spares and Consumables for a period of 7 years under Spares Cost Cap and has accepted offer no. THCM/CIL/20 CuM EHFS/FY2324/Bid Offer/01 dated 27.12.2023 submitted vide Bid ID: 1015459 to be read with shortfall/confirmatory documents submitted through e-procurement portal and subsequent correspondence for the supply of 2 nos. of Equipments i.e. 20 CuM Electric Hydraulic Face Shovels (Make - Hitachi, Model – EX3600E-6, 21 CuM) for the sum of **JPY 94,01,51,144.00 (JPY Ninety Four Crore One Lakhs Fifty One Thousand One Hundred Forty Four Only)** (FOB Value). This works out to **Rs. 66,32,72,357.88 (Rs. Sixty Six Crore Thirty Two Lakhs**

270014

Coal India Ltd.

NAME
ADD
Rs. 100/-
-8 AUG 2025
SURANJAN MUKHERJEE
Licensed Stamp Vendor
C.C. Court
2 & 3, K.S. Roy Road, Kol-1

~~AA - 1A~~,
Newtown,
Kol-156

-8 AUG 2025
-8 AUG 2025

Seventy Two Thousand Three Hundred Fifty Seven and Paisa Eighty Eight Only) on CIP basis in Indian Rupees at the Exchange rate of JPY 1 = Rs 0.5234 as on the date of opening of Price Bid.

The total value of Consumable Spares and Consumables for warranty period of one year and Spares & Consumables for post warranty period of 7 years for the said equipments shall be Rs.161,58,51,777.92 **(Rupees One Hundred Sixty One Crore Fifty Eight Lakhs Fifty One Thousand Seven Hundred Seventy Seven and Paisa Ninety Two Only)** on FOR Destination basis.

The grand total value shall be **Rs. 227,91,24,135.80 (Rs. Two Hundred Twenty Seven Crores Ninety One Lakhs Twenty Four Thousand One Hundred Thirty Five and Paisa Eighty Only)** (hereinafter "the Contract Price") on CIP basis.

NOW THIS AGREEMENT WITNESSETH AS FOLLOWS:

1. In this Agreement, words and expressions shall have the same meaning as are respectively assigned to them in the conditions of Contract referred to.

2. The following documents shall be deemed to form and be read and construed as part of this Agreement viz.
   (a) the Techno- Commercial Bid, Price-Bid and subsequent letters / documents submitted by you
   (b) the Schedule of Requirements & Delivery Schedule
   (c) the Technical Specifications
   (d) the General Conditions of Contract
   (e) the Special Conditions of Contract
   (f) the Price Schedule
   (g) the Purchaser's Notification of Award
   (h) the Integrity Pact

3. In consideration of the payments to be made by the Purchaser to the Supplier as hereinafter mentioned, the Supplier hereby covenants with the Purchaser to provide the Goods and Services and to remedy defects therein in all respects in conformity with the provisions of the Contract.

4. The Purchaser hereby covenants to pay the Supplier in consideration of the provision of the Goods and Services and the remedying of defects therein, the Contract Price or such other sum as may become payable under the provisions of the Contract at the times and in the manner prescribed by the Contract.

5. Brief particulars of the Goods and Services which shall be supplied /provided by the Supplier are as under:

Supply, Installation and Commissioning of 2 nos. of 20 CuM Electric Hydraulic Face Shovels (Make: Hitachi, Model: EX3600E-6, 21 CuM) along with Consumable Spares and Consumables for warranty period of one year and Spares & Consumables for post warranty period of 7 years under Spares Cost Cap:

A. Equipment Price:

Sl. No.	Description	Currency	Value
1	FOB Price (per equipment) inclusive of Agency Commission (Indian Agency is NIL.)	JPY	47,00,75,572.00
2	Marine Freight Charges upto Port of Entry in India*	JPY	4,00,17,291.00
3	Marine Insurance Charges *	JPY	3,20,028.00
4	CIF Price at Port of Entry in India	JPY	51,04,12,891.00
5	Assessable Value	JPY	51,04,12,891.00
6	Basic Customs Duty (BCD) on Assessable CIF Value	JPY	0.00
7	Social Welfare Surcharge (SWS) on BCD	JPY	0.00
8	IGST @ 18 %	JPY	9,18,74,320.38
9	GST @ 5 %on marine freight	JPY	20,00,864.55
10	GST @ 18 % on Indian Agency Commission	JPY	0.00
11	Total CIF Value incl. GST on (Marine Freight + Ind. Agency Commission) (Exchange Rate JPY 1 = Rs 0. 5234)	Rs.	26,81,97,359.65
12	Total Customs Duty	JPY	9,18,74,320.38
13	Total Customs Duty (Exchange Rate JPY 1 = Rs 0.5234)	Rs.	4,80,87,019.29
14	Port charges, clearing forwarding charges and other incidental charges	Rs.	12,10,000.00
15	GST @ 18 % on Port charges, clearing forwarding charges and other incidental charges.	Rs.	2,17,800.00
16	Inland Transportation & Insurance for delivery upto Final Place of Destination*	Rs.	42,00,000.00
17	GST @ 18 % on Inland Transportation & Insurance for delivery upto Final Place of Destination	Rs.	7,56,000.00
18	Erection & Commissioning Charges	Rs.	16,00,000.00
19	GST @ 18 % on Erection & Commissioning	Rs.	2,88,000.00
20	Total Price of all Items sourced in INR required for fitting in the equipment during commissioning of the equipment	Rs.	60,00,000.00
21	Total GST applicable on all Items sourced in INR required for fitting in the equipment during commissioning of the equipment	Rs.	10,80,000.00
22	CIP Price per Equipment without GST	Rs.	28,01,60,107.15
23	GST	Rs.	5,14,76,071.79

Tatia Hitachi Construction Machinery Co. Pvt. Ltd.

6th year Spares & Consumables (quoted in INR)			
1	Total FOR Destination Price	9,24,35,084.00	18,48,70,168.00
2	Total GST	1,66,38,315.00	3,32,76,630.00
3	Total Landed Price with GST	10,90,73,399.00	21,81,46,798.00
7th year Spares & Consumables (quoted in INR)			
1	Total FOR Destination Price	14,10,10,035.00	28,20,20,070.00
2	Total GST	2,53,81,806.00	5,07,63,612.00
3	Total Landed Price with GST	16,63,91,841.00	33,27,83,682.00
8th year Spares & Consumables (quoted in INR)			
1	Total FOR Destination Price	8,12,41,442.00	16,24,82,884.00
2	Total GST	1,46,23,460.00	2,92,46,920.00
3	Total Landed Price with GST	9,58,64,902.00	19,17,29,804.00
Total Basic Price for warranty spares and Consumable Spares and Consumables for 84 months with GST		68,46,82,957.00	136,93,65,914.00
GST on warranty spares and Consumable Spares and Consumables for 84 months with GST		12,32,42,931.96	24,64,85,863.92
Total Landed Price for warranty spares and Consumable Spares and Consumables for 84 months with GST		80,79,25,888.96	161,58,51,777.92

C. Total Value of Equipment and Spares & Consumables for 8years:

Description	Value per Equipment in INR	Extended Value for 2 nos. Equipment in INR
Total Price for Equipment, Consumable Spares and Consumables for warranty period and spares and Consumables for 84 months without GST	96,48,43,064.15	192,96,86,128.30
Total GST on Equipment, Consumable Spares and Consumables for warranty period and spares and Consumables for 84 months	17,47,19,003.75	34,94,38,007.50
Total Landed Price for Equipment, Consumable Spares and Consumables for warranty period and spares and Consumables for 84 months with GST	113,95,62,067.90	227,91,24,135.80

NB: * - Shall be payable at actuals subject to the maximum rate/ amount mentioned above.
Breakup of all Items sourced in INR required for fitment in the equipment during commissioning of the equipment and Breakup of warranty spares & consumables is indicated in the Price Schedule of the contract.

Machinery Co. Pvt. Ltd. Tata Hitachi Construction

24	CIP Price per Equipment with GST (Landed Price)	Rs.	33,16,36,178.94
25	Total Quantity of Equipment (Nos.)		02
26	CIP Price of Total Quantity of Equipment without GST	Rs.	56,03,20,214.30
27	Total GST	Rs.	10,29,52,143.58
28	**CIP Price of Total Quantity of Equipment with GST**	Rs.	66,32,72,357.88

B. Prices for Consumable Spares and Consumables for 12 months of warranty period from the date of commissioning of the equipment and thereafter Spares and Consumables for a period of 7 years under Spares Cost Cap:

Sl No.	Description	Value per Equipment in INR	Extended Value for 2 nos. Equipment in INR
Warranty Consumable Spares & Consumables (quoted in INR)			
1	Total FOR Destination Price for Consumable Spares & Consumables	2,83,09,022.00	5,66,18,044.00
2	Total GST for Consumable Spares & Consumables	50,95,623.96	1,01,91,247.92
3	Total Landed Price for Consumable Spares & Consumables with GST	3,34,04,645.96	6,68,09,291.92
2nd year Spares & Consumables (quoted in INR)			
1	Total FOR Destination Price	4,26,99,401.00	8,53,98,802.00
2	Total GST	76,85,892.00	1,53,71,784.00
3	Total Landed Price with GST	5,03,85,293.00	10,07,70,586.00
3rd year Spares & Consumables (quoted in INR)			
1	Total FOR Destination Price	7,45,50,330.00	14,91,00,660.00
2	Total GST	1,34,19,059.00	2,68,38,118.00
3	Total Landed Price with GST	8,79,69,389.00	17,59,38,778.00
4th year Spares & Consumables (quoted in INR)			
1	Total FOR Destination Price	11,62,68,642.00	23,25,37,284.00
2	Total GST	2,09,28,356.00	4,18,56,712.00
3	Total Landed Price with GST	13,71,96,998.00	27,43,93,996.00
5th year Spares & Consumables (quoted in INR)			
1	Total FOR Destination Price	10,81,69,001.00	21,63,38,002.00
2	Total GST	1,94,70,420.00	3,89,40,840.00
3	Total Landed Price with GST	12,76,39,421.00	25,52,78,842.00

6. Contract Price

Contract Price shall be INR 227,91,24,135.80 (Rs. Two Hundred Twenty Seven Crores Ninety One Lakhs Twenty Four Thousand One Hundred Thirty Five and Paisa Eighty Only) on CIP basis in INR calculated as per the exchange rate of JPY 1 = Rs 0.5234 and applicable statutory Customs Duty, GST and other taxes and levies on the date of opening of Price Bid on 10.07.2024.

7. Price Basis

The contract is on CIP Basis (Final Place of destination) for Equipment and on FOR Destination basis for Spares and Consumables during warranty period and thereafter 7 years from the date of commissioning of the Equipment as indicated in the Price schedule.

8. Statutory Duties, Taxes and Other Levies

Statutory Duties, Taxes and Other Levies like Basic Customs Duty(BCD), Social Welfare Surcharge on Basic Customs Duty, IGST, GST on Marine Freight, GST on Port Charges, Clearing & forwarding charges and incidental charges, GST on Inland Transportation & insurance for delivery upto Final Place of Destination, GST on Erection and Commissioning charges, GST on all items sourced in INR required for fitting in the equipment during commissioning of the equipment, GST on spares and consumables for Eight years of operations as indicated in the Price Schedule, shall be payable by the purchaser.

If there is any statutory change in BCD and GST for the above elements within the contractual delivery period, the same shall be admissible and will be paid based on documentary evidence. However, no upward revision in the rates of the above duties, taxes and other levies beyond original delivery period shall be admissible unless the delay is due to any lapse on the part of the purchaser.

CIL will pay Customs Duty applicable to imported Goods directly to Customs Authorities.

9. Execution of Contract

The contract is concluded among the Purchaser, the Manufacturer/ Supplier and the Indian Subsidiary of the Manufacturer for Supply, Installation and Commissioning of 2 nos. of 20 CuM Electric Hydraulic Face Shovels (Make: Hitachi, Model: EX3600E-6, 21 CuM) along with Consumable Spares and Consumables for warranty period of one year and Spares & Consumables for post warranty period of 7 years under Spares Cost Cap.

LC shall be opened in the name of "M/s Hitachi Construction Machinery Co., Ltd." for CIF value by the Paying Authority. The foreign component of the price of equipment shall be paid to M/s Hitachi Construction Machinery Co., Ltd., Japan. The INR component of the price of the equipment and spares & consumables shall be paid to M/s Tata Hitachi Construction Machinery Company Private Limited.

For the goods & services quoted in INR, execution of such Goods and Services shall be done by M/s Tata Hitachi Construction Machinery Company Private Limited (the Indian

Subsidiary) and the payment of the same shall be paid to M/s Tata Hitachi Construction Machinery Company Private Limited.

IN WITNESS whereof the Parties hereto have caused this Agreement to be executed the day and year first above written.

Signed, Sealed and Delivered by:

For the Purchaser

12/8/25

Name : S.M.Alli
Designation : General Manager(MM)/HoD
Name of Company: Coal India Limited

महाप्रबंधक (सा.प्र.)-विभागाध्यक्ष
GM (MM) - HOD
सी आई एल (मु.) / CIL (HQ.)
कोलकाता / KOLKATA

For the Supplier

12.8.2025

Name: Toshiki Onishi
Designation: Director: Sales & Marketing , Customer Support Department
Name of Company: M/s Tata Hitachi Construction Machinery Company Private Limited
For and behalf of M/s Hitachi Construction Machinery Co., Ltd

12.8.2025

Name : Rishi Raj Kishore
Designation: Head – Government & Institutional Mining Sales
Name of Company: M/s Tata Hitachi Construction Machinery Company Private Limited

Witnesses:

12/08/25

1. Name : Avinash Kumar
Designation: General Manager (MM)
Name of Company: Coal India Limited

12/08/25

2. Name: Nadeem Khan
Designation: Manager(MM)
Name of Company: Coal India Limited

Witnesses:

12/08/25

1. Name: Satoshi Mochizuki
Designation: Senior Advisor-Mining Sales & Service
Name of Company: M/s Tata Hitachi Construction Machinery Co. Pvt. Ltd.
For and behalf of M/s Hitachi Construction Machinery Co., Ltd

12/8/25

2. Name: Aditya Dev
Designation: Manager – Mining sales
Name of Company: M/s Tata Hitachi Construction Machinery Co. Pvt. Ltd.

Tata Hitachi Construction Machinery Co. Pvt. Ltd.

General Conditions of Contract (GCC)

1. Definitions

In the interpretation of the contract and the general and special conditions governing it, unless the context otherwise requires, the following terms shall be interpreted as indicated below:

a) "The Contract" means the agreement entered into between the Purchaser and the Supplier including all attachments and appendices thereto and all documents incorporated by reference therein including Invitation to tender, Instructions to tenderers, Acceptance of tender, Particulars and the General and Special Conditions specified in the acceptance of tender;

b) "Contract Price" means the price payable to the Supplier under the Contract for the full and proper performance of its contractual obligations;

c) "Goods" means all of the equipment, plant, machinery, and/or other materials which the Supplier is required to supply to the Purchaser under the Contract;

d) "Services" means those Services ancillary to the supply of the Goods, such as transportation and insurance, and any other incidental Services, such as installation, commissioning, provision of technical assistance, training and other such obligations of the Supplier covered under the Contract;

e) "GCC" means the Conditions of Contract contained in this section;

f) "SCC" means the Special Conditions of Contract;

g) "Purchaser" means the organization purchasing goods and services, i.e., Coal India Limited or its subsidiaries or areas falling under various subsidiaries of Coal India Limited;

h) "Purchaser's country" is India;

i) "Supplier/Contractor" means the individual, firm or company with whom the contract has been concluded for supplying the Goods and Services under the Contract. The Supplier/Contractor shall be deemed to include its successors (approved by the purchaser), representatives, heirs, executors, administrators and permitted;

j) "CIL'' means Coal India Limited or the Subsidiary Company of CIL or areas falling under various subsidiaries of CIL where Goods are deployed/ used;

k) "Year" means the Calendar Year.

l) "Chairman" means the Chairman of Coal India Limited.

m) "Chairman-cum-Managing Director" means Chairman-cum-Managing Director of any of the Subsidiary Companies of Coal India Limited, presently Central Coalfields Limited, Eastern Coalfields Limited, Western Coalfields Limited, Bharat Coking Coal Limited, Central Mine Planning & Design Institute Limited, South Eastern Coalfields Limited, Northern Coalfields Limited and Mahanadi Coalfields Limited.

n) "Drawing" means the drawing and plans specified in or annexed to the schedule or specifications.

o) "Inspector" means any person nominated by or on behalf of the purchaser to inspect supplies, stores or work under the contract or his duly authorized agent.

p) "Progress Officer" means any person nominated by or on behalf of the Purchaser to visit supplier's works to ascertain position of deliveries of Goods ordered.

q) "Materials" shall mean anything used in the manufacture or fabrication of the stores.

r) "Stores" means the goods specified in the Supply Order or schedule which the

Tata Hitachi Construction Machinery Co. Pvt. Ltd.

supplier/contractor has agreed to supply under contract.

s) "Test" means such test or tests as are prescribed by the specifications or considered necessary by the Inspector or any agency acting under direction of the Inspector.

t) "Site" mean the place or places named in the "Supply Order" or such other place or places at which any work has to be carried out as may be approved by the purchaser.

u) Words denoting the persons shall include any company or association or body of individuals whether incorporated or not.

v) Words in singular include the plural and vice-versa.

w) Words denoting the masculine gender shall be taken to include the feminine gender.

x) "Writing" shall include any manuscript, typewritten or printed statement under or over signature or seal as the case may be.

y) "Unit" and "Quantity" means the unit and quantity specified in the schedule.

z) "Purchase Order" or "Supply Order" or "Order" or "Contract" means an order for supply of stores and includes an order for performance. The terms "Supply Order", "Purchase Order", "Order" and "Contract" are interchangeable.

aa) "Particulars" shall mean the following:

i) Specifications;
ii) Drawing;
iii) Sealed pattern denoting a pattern sealed and signed by the Inspector;
iv) Certified or sealed sample denoting a copy of the sealed pattern or sample sealed by the purchaser for guidance of the Inspector;
v) Trade pattern denoting a standard of the ISI or other standardizing authority or Coal India Ltd. and/ or any of its subsidiary companies or a general standard of the industry and obtainable in the open market;
vi) Proprietary make denoting the product of an individual manufacturer;
vii) Any other details governing the construction, manufacture and/or supply as existing in the contract.

bb) Terms and expressions not defined herein shall have the meanings assigned to them in the Indian Sale of Goods Act, 1930 or the Indian Contract, 1872 or the General Clauses Act, 1897, as amended, as the case may be.

2. Application

These Conditions shall apply to the extent that they are not superseded by provisions in other parts of the Contract.

3. Standards

The Goods supplied under this Contract shall conform to the standards mentioned in the Technical Specifications. Such standards shall be the latest issued by the concerned institution.

4. Use of Contract Documents and Information

4.1 The Supplier shall not, without the Purchaser's prior written consent, disclose the Contract, or any provision thereof, or any specification, plan, drawing, pattern, sample or information furnished by or on behalf of the Purchaser in connection therewith, to any person other than a person employed by the Supplier in the performance of the Contract. Disclosure to any such employed person shall be made in confidence and shall extend only so far as may be necessary for purposes of such performance.

4.2 The Supplier shall not, without the Purchaser's prior written consent, make use of any document or information enumerated in sub-clause 4.1 above, except for purposes of performing the Contract.

4.3 Any document, other than the Contract itself, enumerated in sub-clause 4.1 above shall remain

the property of the Purchaser and shall be returned (in all copies) to the Purchaser on completion of the Supplier's performance under the Contract if so required by the Purchaser.

5. Patent Rights

The Supplier shall indemnify the Purchaser against all third-party claims of infringement of patent, trademark or industrial design rights arising from use of the Goods or any part thereof in the Purchaser's country.

6. Security Deposit – refer clause no.1 of SCC

7. Performance Bank Guarantee

7.1 Wherever applicable, the Supplier shall be required to furnish a Performance Guarantee equivalent to 10% value of the total landed value of the contract including all taxes, duties and other costs and charges. In case of Contracts for procurement of Capital Goods along with Warranty Spares & Consumables (if applicable) and additional Spares & Consumables / AMC / CMC for more than one year, the Performance Guarantee shall be for 10% of equipment landed value along with maximum annual landed value of Spares & Consumables.

7.2 The Performance Guarantee shall be in the form of a Bank Guarantee issued by a RBI scheduled bank in India in the prescribed format on a non-judicial stamp paper.

7.3 The Performance Bank Guarantee (PBG) shall be in the same currency (ies) in which contract has been signed. In case of multi-currency contract, separate PBG in respective currency for required value shall be submitted.

7.4 If the contract is for procurement of equipment, the PBG (s) may be submitted equipment wise also. For this purpose, the value of each equipment will be worked out by dividing the total value of contract for a particular item of NIT, worked out as per provisions contained in clause-7 above, by the number of equipment ordered for that particular item of the NIT.

7.5 The PBG (s) shall remain valid till 3 months after the completion of warranty period.

7.6 The PBG shall be submitted sufficiently in advance (say 3-4 weeks) to enable its verification from the issuing bank, before submission of the invoice for 80% payment of the particular goods/ equipment(s).

7.7 The release of the Performance Bank guarantee(s) after above indicated period, shall be subject to satisfactory performance of the equipment/ items during the warranty period and fulfillment of contractual obligations failing which, action for further extension or encashment of PBG, as deemed suitable shall be taken. The PBG / converted SDBG shall be released with the approval of HOD (MM) of the concerned subsidiary after expiry of validity period upon receipt of:

a) 'No Claim Certificate' from the HOD of User department; and
b) 'No Claim / Dispute Certificate' from the Supplier as per format provided as Annexure-16.

7.8 In case of procurement of equipment, if the successful tenderer which does not have the After Sales Service Support facilities in India like Depot/ Warehouse for supply of spare parts, Workshop facilities for servicing and repair of assemblies, sub-assemblies and equipment, availability of trained technical manpower etc., training facilities for providing training to CIL's personnel, wherever required, additional Performance Bank Guarantee for the 30% value of the total landed value of the contract including all taxes, duties and other costs and charges shall have to be submitted. This 30% PBG will be released after establishment of After Sales Service Support facilities in India subject to confirmation of the same by concerned Head of Technical Department. However, the supplier shall have to submit PBG for 10% of the total contract value to be kept valid for the remaining period of the contract plus 3 months processing period before release of 30% PBG. This 10% PBG will be released after satisfactory performance of all equipment/ items and fulfillment of contractual obligations including warranty obligations.

Tata Hitachi Construction Machinery Co. Pvt. Ltd.

7.9 The PBG will be submitted through Structured Financial Management System (SFMS).

8. Inspections and Tests

8.1 The Purchaser or its representative shall have the right to inspect and/or to test the Goods to confirm their conformity to the Contract Specifications at no extra cost to the Purchaser. Generally, the Goods shall be of the best quality and workmanship and comply with the contract or supply order in all respect. The Technical Specifications shall specify what inspections and tests the Purchaser requires and where they are to be conducted. The Purchaser shall notify the Supplier in writing, of the identity of the inspector(s). The Purchaser reserves the right, at the Purchaser's cost, to depute its own inspector(s) and/or to engage any other third party inspecting agency, to conduct inspections and tests pursuant to the Contract. Sufficient time, atleast 30 days in advance will be given for inspection.

8.2 The inspections and tests may be conducted on the premises of the Supplier, at point of delivery and/or at the Goods' final destination. If conducted on the premises of the Supplier, all reasonable facilities and assistance, including access to drawings and production data, shall be furnished to the inspectors at no charge to the Purchaser. However, any drawing and proprietary information provided for this purpose shall remain in control of the supplier. The inspector shall have full and free access at the supplier's works for the purpose of carrying out inspection. The Inspector shall have the right to put all the stores or materials forming part of the same or any part thereof to such tests as he may think fit and proper. The supplier shall not be entitled to object, on any ground whatsoever, to the method of testing adopted by the Inspector. Unless otherwise provided for in the contract, all stores/materials expended in test will be to supplier's account. In the event of Goods found acceptable by the Inspector during inspection, he shall furnish the supplier with necessary copies of Inspection notes for attaching to the supplier's bill.

8.3 Should any inspected or tested Goods fail to conform to the Specifications, including acceptance tests and periodic tests to verify guaranteed performance, the Purchaser may reject the Goods, and the Supplier shall either replace the rejected Goods or make alterations necessary to meet Specification requirements free of cost to the Purchaser within thirty days of such rejection. Replaced or altered goods shall be subjected to repeated inspection or tests to demonstrate conformity with the Specifications. In the event that replacement or alteration is not done within thirty day period as aforesaid, or, replaced or altered goods fail to demonstrate conformity with the Specifications in repeated inspections or tests as aforesaid, the Purchaser reserves the right to terminate the Contract in part or in whole and the Supplier shall repay forthwith to the Purchaser all monies paid including all costs incurred in the inspection and tests, in respect of Goods and Services associated therewith, for which the termination is applicable and, subsequently remove the same from the Purchaser's Site at the Supplier's cost.

8.4 Any Goods rejected at a place other than the premises of the supplier, shall be removed by the supplier within 14 days of the date of receipt of intimation of such rejection. The Inspector may call upon the supplier to remove what he considers to be dangerous, infected or perishable Goods, within 48 hours of the receipt of such intimation. The rejected stores shall under all circumstances lie at the risk of the supplier from the moment of rejection and if such stores are not removed by the supplier within the above mentioned period, the Inspector/Purchaser may either return the same to the supplier at the supplier's risk and cost (a public tariff rate) by such mode of transport as the Purchaser or Inspector may select or dispose of such stores at the supplier's risk on his account and retain in such portion of the proceeds as may be necessary to cover any expense incurred in connection with such disposal. The purchaser shall also be entitled to recover handling and storage charges for the period during which the rejected stores are not removed.

8.5 The Purchaser's right to inspect, test and where necessary, reject the Goods after the Goods' arrival in the Purchaser's country shall in no way be limited or waived by reason of the Goods having previously been inspected, tested and passed by the Purchaser or its representative prior to the Goods' shipment from the Supplier's premises.

8.6 Nothing in this clause shall in any way relieve the Supplier of any warranty or other obligations under this Contract.

9. Packing and Marking

9.1 The Supplier shall provide such packing of the Goods as is required to prevent their damage or deterioration during transit to their final destination, as indicated in the Contract. The packing shall be sufficient to withstand, without limitation, rough handling during transit and exposure to extreme temperatures, salt and precipitation during transit and open storage. Packing case size and weights shall take into consideration, where appropriate, the remoteness of the Goods' final destination and the absence of heavy handling facilities at all points in transit.

9.2 All packing cases, containers, packing and other similar materials shall be supplied free by the Supplier and these shall not be returned unless otherwise specified in the Contract/Purchase order.

9.3 The packing, marking and documentation within and outside the packages shall comply strictly with such special requirements as shall be expressly provided for in the Contract, including additional requirements, if any, specified in the contract and in any subsequent instructions ordered by the Purchaser. Packages will be stamped with identification marks both outside the packages as well as on the contents inside. Packages containing articles liable to be broken by rough handling like glass or machinery made of cast iron will be marked with cautionary works like 'Fragile' 'Handle with care'.

9.4 The marking of the Goods must comply with the requirements of the law relating to Merchandise Mark, in force in India.

9.5 Packing instructions: The Supplier will be required to make separate packages for each consignee. Each package will be marked on three sides with proper paint with the following:

i. Project;
ii. Contract No;
iii. Country of origin of Goods;
iv. Supplier's name;
v. Packing list Reference Number;
vi. The gross weight, net weight and cubic measurement;
vii. Consignee Name and Address;

9.6 A complete list of contents in each package called the packing list will be prepared and one copy of the packing list shall be inserted inside the package.

10. Delivery and Documents

10.1 The delivery period stipulated in the Contract/Purchase Order shall be deemed to be the essence of the contract and delivery of the Goods must be completed within the specified period.

10.2 Delivery of the Goods shall be made by the Supplier in accordance with the terms specified in the Schedule of Requirements. The delivery of Goods shall be deemed to take place on delivery of the Goods in accordance with the terms of the contract after approval of Goods by the Inspector.

10.3 For purposes of the Contract, "EXW", "FOB", "FCA", 'CFR", "CIF", "CIP" and other trade terms used to describe the obligations of the Parties shall have the meanings assigned to them by the prevailing edition of Incoterms on the date of tender opening, published by the International

Chamber of Commerce, Paris.

10.4 The details of shipping documents to be furnished by the Supplier are specified below:

(a) For Imported Goods:

Within forty eight (48) hours of shipment, the Supplier shall notify the Purchaser, Port Consignee and Ultimate Consignee by fax and email, full details of the shipment including Contract number, description of Goods, quantity, the vessel, the bill of lading number and date, port of loading, date of shipment, port of discharge, etc. The Supplier shall deliver by express courier service the following documents to the Purchaser, with a copy to the Port Consignee and Ultimate Consignee:

i. Supplier's shipping invoice showing Contract Number, Goods description, quantity, unit price, total amount and GST number of ultimate consignee;

ii. Clean on-board bill of lading indicating the Importer-Exporter Code (IEC) of the concerned Subsidiary Company of CIL and non-negotiable bill of lading;

iii. Packing list identifying contents of each package;

iv. Manufacturer's/Supplier's warranty /guarantee certificate;

v. Manufacturer's Test & Inspection certificate;

vi. Certificate of Country of Origin issued by the Chamber of Commerce of Manufacturer's Country;

vii. Documentary evidence of marine freight & marine insurance.

The above documents shall be sent by supplier well in advance, so that the same are received by the Purchaser at least one (1) week before arrival of the Goods at the port or place of arrival and, if not received, the Supplier will be responsible for any consequent expenses.

(b) For Domestic Goods from within India:

Upon dispatch of the Goods to the consignee, the Supplier shall notify the Purchaser and Ultimate Consignee and deliver by express courier service the following documents to the Purchaser with a copy to the Ultimate Consignee:

i. Supplier's invoice showing Contract Number, Goods description, quantity, unit price, total amount;

ii. Railway receipt/ Transporter's consignment note /acknowledgement of receipt of Goods from the consignee(s);

iii. Manufacturer's/Supplier's warranty / guarantee certificate;

iv. Manufacturer's Test & Inspection certificate;

The above documents shall be provided by the supplier at the time of arrival of the Goods at the consignee's end. In case of delay, the Supplier will be responsible for any consequent expenses.

11. Insurance

11.1 Wherever necessary, the goods supplied under the contract, shall be fully insured in a freely convertible currency against loss or damage incidental to manufacture or acquisition, transportation, delivery, storage and erection and commissioning at site (wherever applicable) in the manner specified in the contract. The insurance is to be done for coverage on "all risks" basis including war risks and strike clauses. The amount to be covered under insurance should be 110% of the invoice value to take care of the overall expenditure to be incurred by the purchaser for receiving the goods at the destination.

11.2 Where delivery of imported goods is required by the purchaser on CIF/CIP basis, the supplier

shall arrange and pay for marine/air insurance, making the purchaser as the beneficiary. Where delivery is on FCA/ FOB/ CFR basis, marine/air insurance shall be the responsibility of the purchaser.

11.3 In case of domestic supplies on Free Delivery at site/FOR Destination basis, the supplier has to arrange insurance at its cost. For Ex-works and FOR station of dispatch contracts, it is the responsibility of the purchaser to arrange for insurance.

11.4 Where the delivery of the Goods is on CIP Basis, the supplier shall deliver the goods at the named place of destination at its own risks and costs. CIL has no obligation to the supplier for arranging insurance. However, CIL will provide the supplier upon request, with necessary information for obtaining insurance.

11.5 Where the delivery of the Goods is on FOR destination Basis, the supplier shall deliver the goods at the FOR destination site at its own risks and costs. CIL has no obligation to the supplier for arranging insurance. However, CIL will provide the supplier upon request, with necessary information for obtaining insurance".

12. Transportation

12.1 In case of FOB (Port of Shipment) contracts, the purchaser has to arrange transportation its own cost and risk.

12.2 In case of CIF (Port of Destination) contracts, transport of the goods to the port of destination in the Purchaser's country, as shall be specified in the contract, shall be arranged and paid for by the Supplier, and the cost thereof shall be included in the Contract Price. In case of inland transportation of goods, the same is to be done through registered common carriers only.

12.3 In case of CIP (Final Place of Destination) contracts, transport of the goods to the port of destination and further to the named place of Final Destination in the Purchaser's country, as shall be specified in the contract, shall be arranged and paid for by the Supplier, and the cost thereof shall be included in the Contract Price. In case of inland transportation of goods, the same is to be done through registered common carriers only.

12.4 In case of FOR Destination contracts, transport of goods to the Destination site shall be arranged and paid for by the supplier and the cost thereof shall be included in the contract price. Transportation of goods is to be done through registered common carriers only.

13. Warranty

13.1 The Supplier warrants that the Goods supplied under the Contract are new, unused, of the most recent or current models and that they incorporate all recent improvements in design and materials unless provided otherwise in the Contract. The Supplier further warrants that all Goods supplied under this Contract shall have no defect arising from design, materials or workmanship or from any act or omission of the Supplier that may develop under normal use of the supplied Goods in the conditions prevailing in the purchaser's country.

13.2 This warranty shall remain valid for twelve (12) months from the date of Commissioning of the equipment. However, in case of other Goods, warranty shall remain valid for eighteen (18) months from the date of receipt and acceptance of materials at consignee's end or twelve (12) months from the date of its use / fitment / commissioning, whicheveris earlier.

13.3 The Purchaser shall promptly notify the Supplier in writing of any claims arising under this warranty. The Supplier shall, within thirty days, repair or replace the defective Goods or parts thereof, free of cost at the ultimate destination. The Supplier shall take over the replaced parts/Goods at the time of their replacement. No claim whatsoever shall lie on the Purchaser for the replaced parts/Goods thereafter.

Tata Hitachi Construction Machinery Co. Pvt. Ltd.

12/08/25

13.4 If the Supplier, having been notified, fails to remedy the defect(s) within thirty days, the Purchaser may proceed to take such remedial action as may be necessary, at the Supplier's risk and expense and without prejudice to any other rights which the Purchaser may have against the Supplier under the Contract.

13.5 For the goods whose life is less than twelve (12) months, the warranty period will depend on the nature of the item under procurement and shall accordingly be specified in SCC.

14. Payment

14.1 Specific payment terms may be stipulated in the NIT and the resultant contracts depending on the nature of goods to be procured, as per provisions contained in Chapter-22.

14.2 Payment for Indian Agency Commission (Not Applicable)

15. Changes in Order

The Purchaser may at any time, by a written order given to the Supplier, make changes within the general scope of the Contract in any one or more of the following:

a) drawings, designs or specifications, where Goods to be furnished under the Contract are to be specifically manufactured for the Purchaser;
b) the method of shipment or packing;
c) the place of delivery; and/or
d) the place of Services to be provided by the Supplier.

16. Contract Amendments

Subject to relevant clause of GCC, no variation in or modification of the terms of the Contract/ Purchase Order shall be made except by written amendment issued against the Contract/ Purchase Order.

17. Assignment

The Supplier shall not assign, in whole or in part, its obligations to perform under this Contract, except with the Purchaser's prior written consent. However, the consent of the Purchaser shall not relieve the supplier from any obligation, duty or responsibility under the contract.

18. Subcontracts

The Supplier shall notify the Purchaser in writing of all subcontracts awarded by it to discharge the works under this Contract. Such notification, in the original bid or later, shall not relieve the Supplier of any liability or obligation under the Contract and the supplier will be solely responsible for all obligations under the contract.

19. Delays in the Supplier's Performance

19.1 Delivery of the Goods and performance of Services shall be made by the Supplier in accordance with the time schedule prescribed by the Purchaser in the Schedule of Requirements.

19.2 If at any time during performance of the Contract, the Supplier or its Subcontractor(s) should encounter conditions impeding timely delivery of the Goods and performance of Services, the Supplier shall promptly notify the Purchaser in writing of the fact of the delay, its likely duration and its cause(s). As soon as practicable after receipt of the Supplier's notice, the Purchaser shall evaluate the situation and may at its discretion extend the Supplier's time for performance, with or without liquidated damages, by way of an by amendment to the Contract/ Purchase Order.

19.3 Except as provided under Force Majeure clause, a delay by the Supplier in the performance of its delivery obligations shall render the Supplier liable to the imposition of liquidated damages, unless an extension of time is agreed upon pursuant to relevant clause without the application of liquidated damages.

20. Liquidated Damages

20.1 In the event of failure to deliver or dispatch the equipment/stores within the stipulated date/period in accordance with the terms and conditions and the specifications mentioned in the supply order and in the event of breach of any of the terms and conditions mentioned in the supply order, the Purchaser shall have the right:

(a) To recover from the successful bidder as agreed liquidated damages, a sum not less than 0.5% (Half Percent) of the price of any equipment/ stores which the successful tenderer has not been able to supply as aforesaid for each week or part of a week during which the delivery of such stores may be in arrears limited to 10% (Ten Percent) of the total contract value, or

(b) To purchase elsewhere after due notice to the successful tenderer on the account and at the risk of the defaulting supplier, the equipment/stores not supplied or others of similar description without cancelling the supply order in respect of the consignment not yet due for supply, or

(c) To cancel the supply order or a portion thereof, and if so desired to purchase the equipment/ stores at the risk and cost of the defaulting supplier and also,

(d) To extend the period of delivery with or without penalty as may be considered fit and proper. The penalty, if imposed, shall not be more than the agreed liquidated damages referred to in clause (a) above.

(e) To forfeit the security deposit fully or in part.

(f) Whenever under this contract any sum of money is recoverable from and payable by the supplier, the Purchaser shall be entitled to recover such sum by appropriating in part or in whole by deducting any sum or which at any time thereafter may become due to the successful tenderer in this or any other contract. If this sum is not sufficient to recover the full amount recoverable, the successful tenderer shall pay the Purchaser the remaining balance on demand. The supplier shall not be entitled to any gain on any such purchase.

20.2 For the purpose of the calculation of the liquidated damages amount, the basic FOR Destination price shall be considered. For direct imports, the CIP price at Final Place of destination will be considered. Taxes and duties shall not be taken into account for calculation of LD. However, when prices indicated in the order are inclusive of taxes and duties, such prices will be taken for calculation of LD.

21. Termination for Default and breach of contract

21.1 The Purchaser, without prejudice to any other remedy for breach of Contract, by written notice of default sent to the Supplier, may terminate the Contract in whole or in part:

(a) If the supplier fails to deliver any or all of the stores within the time period(s) specified in the contract, or any extension thereof granted by the Purchaser; or

(b) If the supplier fails to perform any other obligation under the contract within the period specified in the contract or any extension thereof granted by the purchaser; or

(c) If the Supplier, in the judgment of the Purchaser, has violated Code of Integrity for Public Procurement in competing for or in executing the Contract.

21.2 Code of Integrity for Public Procurement (CIPP):

The supplier shall observe the highest standard of ethics while competing for and during execution of contracts.

The following practices would amount to violation of CIPP:

Construction Machinery Co. Pvt. Ltd. Tata Hitachi

12/08/25

i. "Corrupt Practice" means making offers, solicitation or acceptance of bribe, rewards or gifts or any material benefit, in exchange for an unfair advantage in the procurement process or to otherwise influence the procurement process or contract execution;

ii. "Fraudulent Practice" means any omission or misrepresentation that may mislead or attempt to mislead so that financial or other benefits may be obtained or an obligation avoided. This includes making false declaration or providing false information for participation in a tender process or to secure a contract or in the execution of a contract;

iii. "Anti-competitive Practice" means any collusion, bid rigging or anti-competitive arrangement, or any other practice coming under the purview of The Competition Act 2002, between two or more bidders, with or without the knowledge of the Purchaser, that may impair the transparency, fairness and the progress of the procurement process or to establish bid prices at artificial, non-competitive levels;

iv. "Coercive Practice" means harming or threatening to harm, directly or indirectly, at any stage, persons or their property to influence their participation in the procurement process or affect the execution of a contract;

v. "Conflict of interest" means participation by a bidding firm or any of its affiliates that are either involved in the consultancy contract to which this procurement is linked; or if they are part of more than one bid in the procurement; or if the bidding firm or their personnel have relationships or financial or business transactions with any official of Procuring Entity who are directly or indirectly related to tender or execution process of contract; or improper use of information obtained by the (prospective) bidder from the Procuring Entity with an intent to gain unfair advantage in the procurement process or for personal gain; and

vi. "Obstructive practice" means materially impede the Procuring Entity's investigation into allegations of one or more of the above mentioned prohibited practices either by deliberately destroying, falsifying, altering; or by concealing of evidence material to the investigation; or by making false statements to investigators and/or by threatening, harassing or intimidating any party to prevent it from disclosing its knowledge of matters relevant to the investigation or from pursuing the investigation; or by impeding the Procuring Entity's rights of audit or access to information.

22. Force Majeure

22.1 Force Majeure means an event beyond the control of the supplier and not involving the supplier's fault or negligence and which is not foreseeable. Such events may include, but are not restricted to, acts of the purchaser either in its sovereign or contractual capacity, wars or revolutions, hostility, acts of public enemy, civil commotion, sabotage, fires, floods, explosions, epidemics, quarantine restrictions, strikes, lockouts, freight embargoes and act of God.

22.2 If there is delay in performance or other failures by the supplier to perform its obligation under the contract due to an event of a Force Majeure and the contract is governed by Force Majeure Clause, the supplier shall not be held responsible for such delays/failures.

22.3 In such a situation, the supplier shall promptly notify the purchaser in writing of such conditions and the cause thereof, duly certified by the local Chamber of Commerce or Statutory authorities, the beginning nd end of the causes of the delay, within twenty one days of occurrence and cessation of such Force Majeure Conditions. Unless otherwise directed by the purchaser in writing, the supplier shall continue to perform its obligations under the contract as far as reasonably practical and shall seek all reasonable alternative means for performance not prevented by the Force Majeure event.

22.4 If the performance in whole or in part or any obligation under this contract is prevented or delayed

by any reason of Force Majeure for a period exceeding sixty days, either party may at its option terminate the contract without any financial repercussion on either side.

22.5 For delays arising out of Force Majeure, the supplier will not claim extension in completion date for a period exceeding the period of delay attributable to the causes of Force Majeure.

22.6 There may be a Force Majeure situation affecting the purchaser also. In such a situation, the purchaser is to take up with the supplier on similar lines as above for further necessary action.

22.7 The contract shall be governed by the following Force Majeure Clause:
"If at any time, during the continuance of this contract, the performance in whole or in part by either party of any obligation under this contract shall be prevented or delayed by reason of any wars or revolutions, hostility, acts of public enemy, civil commotion, sabotage, fires, floods, explosions, epidemics, quarantine restrictions, strikes, lockouts, freight embargoes or act of God (hereinafter referred to "events") provided, notice of the happening of any such event is given by either party to the other within 21 days from the date of occurrence thereof, neither party shall by reason of such event, be entitled to terminate this contract nor shall either party have any claim for damages against the other in respect of such non- performance or delay in performance, and deliveries under the contract shall be resumed as soon as practicable after such event has come to an end or ceased to exist, PROVIDED FURTHER that if the performance in whole or part or any obligation under this contract is prevented or delayed by reason of any such event for a period exceeding 60 days, either party may at its option terminate the contract provided also that if the contract is terminated under this clause, the purchaser shall be at liberty to take over from the contractor at a price to be fixed by the CIL/Subsidiary Company, which shall be final, all unused, undamaged and acceptable materials, bought out components and stores in course of manufacture in the possession of the contractor at the time of such termination or such portion thereof as the purchaser may deem fit excepting such materials, bought out components and stores as the contractor may with the concurrence of the purchaser elect to retain."

23. Termination for Insolvency

The Purchaser may at any time terminate the Contract by giving written notice to the Supplier if the Supplier becomes bankrupt or otherwise insolvent. In this event, termination will be without compensation to the Supplier, provided that such termination will not prejudice or affect any right of action or remedy which has accrued or will accrue thereafter to the Purchaser.

24. Termination for Convenience

24.1 The Purchaser, by written notice sent to the Supplier, may terminate the Contract, in whole or in part, at any time for its convenience. The notice of termination shall specify that termination is for the Purchaser's convenience, the extent to which performance of the Supplier under the Contract is terminated, and the date upon which such termination becomes effective.

24.2 The Goods that are complete and ready for shipment within thirty (30) days after the Supplier's receipt of notice of termination shall be accepted by the Purchaser at the Contract terms and prices. For the remaining Goods, the Purchaser may elect:

a) to have any portion completed and delivered at the Contract terms and prices; and/or

b) to cancel the remainder and pay to the Supplier an agreed amount for partially completed Goods and Services and for materials and parts previously procured by the Supplier.

25. Governing Language

The Contract shall be written in English language. All correspondence and other documents pertaining to the Contract which are exchanged by the Parties shall be written in the same language.

26. Taxes and Duties

Tata Hitachi Construction Machinery Co. Pvt. Ltd.

26.1 A foreign Supplier shall be entirely responsible for all taxes, duties, license fees and other such levies imposed outside the Purchaser's country. The foreign supplier shall also be responsible for all taxes & duties in Purchaser's country legally applicable during execution of the contract other than those which are to be paid by purchaser, as specified in as per relevant clause of NIT.

26.2 A Domestic Supplier shall be entirely responsible for all taxes, duties, license fees, etc., incurred until the execution of the contract, other than those which are to be paid by purchaser, as specified in as per relevant clause of NIT.

27. Limitation of Liabilities

Except in cases of criminal negligence or wilful misconduct;

27.1 Notwithstanding anything herein to the contrary, no party shall be liable for any indirect, special, punitive, consequential or exemplary damages, whether foreseeable or not, arising out of or in relation to this contract, loss of goodwill or profits, lost business however characterized, any/ or from any other remote cause whatsoever.

27.2 The supplier shall not be liable to the purchaser for any losses, claims, damages, costs or expenses whatsoever arising out of or in connection with this contract in excess of the contract value of the goods and services supplied hereunder which caused such losses, claims, damages, costs or expenses.

27.3 However, the limitation of liability of the supplier indicated above shall not apply to Liquidated damages.

28. Settlement of commercial disputes in case of contracts with Public Sector Enterprises/ Govt. Dept.(s) - Not Applicable.

29. Progress Reports

29.1 The Supplier shall from time to time render such reports concerning the progress of the contract and/or supply of the stores in such form as may be required by the Purchaser.

29.2 The submission, receipt and acceptance of such reports shall not prejudice the right of the Purchaser under the contract nor shall operate as an estoppel against the Purchaser merely by reason of the fact that he has not taken notice of or objected to any information contained in such report.

30. Provisions of CIL's Purchase Manual

The provisions of CIL's Purchase Manual and its subsequent amendments (Available on CIL's website, www.coalindia.in) shall also be applicable, if not specified otherwise in this Bid document.

31. Applicable Law

The Contract shall be governed by the laws of the Republic of India, unless otherwise specified in the bid document.

32. Jurisdiction of Courts

32.1 Irrespective of the place of delivery, the place of performance or place of payment under the contract, the contract shall be deemed to have been made at the place from where the acceptance of tender or supply order has been issued.

32.2 The courts of the place from where the acceptance of tender has been issued shall alone have jurisdiction to decide any dispute arising out of or in respect of the contract.

33. Notices

33.1 Any notice given by one Party to the other pursuant to this Contract shall be sent to the other Party in writing or facsimile to be confirmed in writing, to the other Party's address. For the purpose of all notices, the following shall be the addresses of the Purchaser and the Supplier:

Purchaser:

General Manager(MM)/HOD,
Coal India Limited,
Coal Bhawan, Premises No. 04,
Plot No. AF-II, Action Area 1A,
New Town, Rajarhat,
Kolkata – 700 156, West Bengal, India
Fax No.:+9133 – 2324 4115
Phone: +9133 – 2324 4127]

Supplier:
M/s Tata Hitachi Construction Machinery Company Private Limited
Jubilee Building,
45, Museum Road,
Bangalore - 560025, India
email: rishi.raj@tatahitachi.co.in
Phone no – 080-66953301-05, 9243189834

M/s Hitachi Construction Machinery Co., Ltd.,
Ueno East Tower, 14th Floor, 2-16-1, Higashiueno,
Taito-ku, Tokoyo, Japan – 110-0015

33.2 A notice shall be effective when delivered or on the notice's effective date, whichever is later.

33.3 In case of change in address, the Supplier shall immediately notify the same to the Purchaser in writing. The supplier shall be solely responsible for the consequences of omission to notify the change of address to the Purchaser.

Tata Hitachi Construction Machinery Co. Pvt. Ltd.

12/08/25

Special Conditions of Contract (SCC)

Special Conditions of Contract (SCC)

The following Special Conditions of Contract shall supplement the General Conditions of Contract. Whenever there is a conflict, the provisions contained herein shall prevail over those in the General Conditions of Contract. The corresponding Clause number of the General Conditions is indicated in parentheses. Further, there are some additional clauses in SCC.

1. **Security Deposit (GCC clause –6)**

1.1 The supplier has deposited security money in two separate bank guarantees in terms of the NIT provisions for 5 % (Five percent) value of the total landed value of the contract including all taxes, duties and other cost and charges as detailed below:-

A. Security Deposit in JPY:
Bank Guarantee No. MD2518440001 dated 03.07.2025 for JPY 6,33,61,899.00 (JPY Six Crore Thirty Three Lakhs Sixty One Thousand Eighty Hundred Ninety Nine Only) valid till 31.07.2027 from Sumitomo Mitsui Banking Corporation. The same has been confirmed by the bank through SFMS.
A copy of Bank Guarantee is enclosed as Annexure-1 (a).

B. Security Deposit in Indian Rupees:
Bank Guarantee No. 0686125BGOB00481 dated 26.06.2025 for Rs.1,66,39,185.00 (Rupees One Crore Sixty Six Lakhs Thirty Nine Thousand One Hundred Eight Five Only) valid till 31.07.2027 from State Bank of India and its amendment dated 05.07.2025 and 17.07.2025. The same has been confirmed by the bank through SFMS.
A copy of Bank Guarantee is enclosed as Annexure-1 (b).

1.2 The SDBG shall remain valid upto 3 months after the supply and commissioning of all the equipment. The SDBG will be released within 30 days after successful commissioning of all the equipment covered in the contract and on receipt of confirmation of Performance Bank Guarantee(s) for all the equipment covered in the contract, as detailed in clause-2 below. The Bank Guarantee for Security Deposit shall be extended till the Performance Bank Guarantee (s) are submitted by the firm, failing which Security Deposit will be forfeited.

1.3 Subject to force majeure conditions, if the Manufacturer/Supplier fails to extend the Bank Guarantee for Security Deposit, suitably as required, the same shall also be recorded as unsatisfactory performance for future dealings apart from taking any other penal action as may be deemed fit by CIL.

1.4 Security Deposit may be converted into Performance Bank Guarantee (PBG) at the option of the supplier by increasing its validity accordingly. Also, the format needs to be modified to take into account the Contract no. and date instead of the NoA no. and date. At the time of conversion of Security Deposit into PBG, it should be ensured that the amount of PBG should not be less than the amount prescribed under Clause-2.1 below. Wherever Security Deposit is converted into PBG, the operation of such SDBG/Performance BG shall be guided by Performance Bank Guarantee Clause mentioned below.

2. **Performance Bank Guarantee (PBG) (GCC Clause 7)**

2.1 The supplier shall be required to furnish a Performance Guarantee equivalent to 10% value of the total landed value of the Equipment along with maximum annual landed value of spares and consumables of the contract including all taxes, duties and other costs and charges without considering Input Tax Credit subsidiary-wise. The PBG will be required to be submitted subsidiaries wise to Paying Authority of concerned.

2.2 The Performance Guarantee shall be in the form of Bank Guarantee issued by a RBI scheduled bank in India in the format attached as [Annexure-2], on a non-judicial stamp paper.

2.3 The Performance Bank Guarantee (PBG) shall be in the same currency (ies) in which contract has been signed. In case of multi-currency contract, separate PBG in respective currency for required value shall be submitted.

2.4 The Performance Bank Guarantee (s) may be submitted equipment wise to the concerned subsidiary where the equipment will be supplied. For this purpose, the value of each equipment will be worked out by dividing the total value of PBG, by the number of equipment ordered.

The equipment-wise PBG(s) shall be as follows:

PBG in JPY	PBG in INR
6,33,61,899/-	1,66,39,185.00

2.5 The PBG (s) shall remain valid till 3 months after the completion of the contractual period of all the equipment covered in the contract.

2.6 The PBG shall be submitted, sufficiently in advance (say 3-4 weeks) to enable its verification before submission of the invoice for 80% payment of the particular equipment(s) OR
in case the Supplier desires to convert SDBG into PBG at its option, extension of validity of SDBG for the requisite period as mentioned at Clause 2.5 above and suitable changes in format, is to be submitted before submission of the invoice for 80% payment of the first equipment of the contract OR
in lieu of PBG, a letter be submitted sufficiently in advance (say 3-4 weeks) to the Paying Authority to deduct PBG value from the invoice for 80% payment of the particular equipment (s) which may be kept as PBG for that particular equipment(s).

2.7 The PBG issued by Issuing bank on behalf of the supplier in favour of "concerned subsidiary where the equipment will be supplied" shall be in paper form (Stamp Paper) as well as issued under "Structured Financial Messaging System". The details of beneficiary Bank for issue of BG through SFMS Platform will be provided by the concerned subsidiary. The date of SFMS confirmation to Paying Authority shall be deemed to be the date of receipt of the BG. Original copy of the PBG issued by the Issuing Bank shall be sent by the issuing bank to concerned subsidiary. However, if the original copy of the BG

is handed over to the supplier by the Issuing bank, the issuing bank shall send an e-mail from their corporate e-mail id (on the date of handing over) directly to corporate e-mail id of the order placing authority that they have handed over the original copy of the BG to the supplier for handing over to the beneficiary, attaching a scanned copy of the SDBG.

2.8 The release of the Performance Bank Guarantee(s) / converted SDBG after above indicated period, shall be subject to satisfactory performance of the equipment during 8 years period from the date of commissioning of the equipment and fulfillment of contractual obligations failing which, action for further extension or encashment of PBG / converted SDBG, as deemed suitable shall be taken. Release of PBG for each equipment may be done separately on satisfactory performance of the respective equipment as above. In case of converted SDBG, the release will be done only after satisfactory performance of all the equipment covered in the Contract or in case of unsatisfactory performance of some equipment, or on receipt of the Claim amount to be recovered from the Supplier, with suitable deductions for unsatisfactory performance of equipment, if any, from the converted SDBG.
The PBG / converted SDBG shall be released with the approval of HOD (MM) of the concerned subsidiary after expiry of validity period upon receipt of:

a) 'No Claim Certificate' from the HOD of User department; and
b) 'No Claim / Dispute Certificate' from the Supplier as per format provided as Annexure-5.

Whenever deductions towards unsatisfactory performance of equipment or non-achievement of guaranteed availability in a particular year(s) are made within the tenure of the PBG/converted SDBG during the contract period, the amount deducted from the PBG/converted SDBG should be replenished within a month in order to ensure that the original value of the PBG/converted SDBG remains the same throughout the contract period.

2.9 You shall submit the copy of SFMS Message as sent by the issuing Bank branch along with original Bank guarantee.

3. Inspection and Test (GCC Clause 8)

3.1 Pursuant to Clause 8.1 of the GCC, details of specific inspections and/or tests to be carried out at the Supplier's works and/or at the Site(s) are given in Section VI, Technical Specifications.

3.2 Clause 8.3 of the GCC is modified to read as follows:
"Should any inspected or tested Goods fail to conform to the Specifications, including acceptance tests and periodic tests to verify guaranteed performance, the Purchaser may reject the Goods, and the Supplier shall either replace the rejected Goods or make alterations necessary to meet Specification requirements free of cost to the Purchaser within sixty (60) days of such rejection. Replaced or altered goods shall be subjected to repeated inspection or tests to demonstrate conformity with the Specifications. In the event that replacement or alteration is not done within sixty day period as aforesaid, or, replaced or altered goods fail to demonstrate conformity with the Specifications in repeated inspections or tests as aforesaid, the Purchaser reserves the right to terminate the Contract in part or in whole and the Supplier shall repay forthwith to the Purchaser all monies paid in respect of Goods, and Services associated therewith, for which the termination is applicable and, subsequently remove the same from the Purchaser's Site at the Supplier's cost".

3.3 The following Clause is added as Clause 8.7 to the GCC:

"The Purchaser or its nominated representative shall have the right to conduct inspections or tests as set out in this Clause at any reasonable time. The Purchaser reserves the right, at the Purchaser's cost, to depute its own inspector(s) and/or to engage any other third party inspecting agency, other than the one recommended by the Supplier, to conduct inspections and tests pursuant to the Contract".

4. Incidental Services

The following Services, shall be provided by the Supplier:

(a) Erection, Testing and Commissioning

Erection, testing and commissioning of the Equipment as detailed in the Schedule of Requirements and the Technical Specifications.

The supplier shall be responsible for the erection and commissioning within 30 days from the receipt of equipment at site.

The purchaser will provide necessary cranes, electricity and fuel required for testing only. All other erection tools & tackles including manpower will be arranged by the supplier. Any substantial delay in providing cranes from purchaser side will be recorded jointly for calculation purpose of erection & commissioning time.

If the supplier fails to commission the equipment within the specified period as mentioned above, Liquidated damages will be recovered @ 0.5% of the landed price of the equipment along with accessories per week or part thereof for the delayed period subject to a maximum of 5% of the landed price of equipment along with accessories.

(b) Tools

Supplier have furnished tools required for assembly and maintenance of the supplied Goods as detailed in the Schedule of Requirements and the Technical Specifications.

(c) Manuals

Furnishing of detailed operating, repair, maintenance and spare parts manuals as detailed in the Technical Specifications.

(d) Training

Training of the Purchaser's personnel as detailed in the Schedule of Requirements and the Technical Specifications. The cost of such Services shall be included in the Contract Price.

The Supplier shall be responsible for arranging and the cost of all necessary tickets, visas, permits, foreign exchange and any other matter or facility for visits of the Supplier's personnel for the purposes of Erection, Testing and Commissioning the Equipment and/or Training of the Purchaser's personnel - the Purchaser shall have no responsibility in this regard except in respect of issuance of letters supporting visa applications as may reasonably be requested by the Supplier. The Supplier shall be responsible for paying taxes, if any, including personal income tax and surcharge on income tax, for which it or its personnel may become liable.

For visit of Purchaser's personnel to manufacturer's works/venue of training, the

Purchaser shall arrange all necessary tickets, conveyance, lodging and boarding and any other matter or facility for visits of Purchaser's personnel.

5. Insurance (GCC Clause-11)

Pursuant upon Clause-11.1, GCC, the insurance coverage of the goods will be upto successful erection and commissioning of the equipment at site.

6. Transportation (GCC Clause-12)

Add the following paragraph to the Clause-12.3, GCC:

"Marine Freight and Insurance Charges shall be paid at actuals subject to the ceiling of quoted amount. Inland Freight charges and Insurance charges shall be paid at actuals but not beyond the rate/ price quoted under these heads."

7. Warranty (GCC Clause-13)

The "thirty days" mentioned in Clauses-13.3 and 13.4 of the GCC shall stand replaced by "sixty days".

For the purpose of Clause 13.5 of the GCC, "For the goods whose life is less than twelve (12) months, the warranty period will depend on the nature of the item under procurement" and the parts manufacturer's or supplier's guarantee /warranty certificate shall suffice.

8. Payment (GCC Clause 14)

8.1 Pursuant to Clause-14.1 of the GCC, the payment terms are as follows:

8.2 Payment shall be made in the currency or currencies specified in the contract in the following manner:

8.2.1 For Payment of equipment in Indian Rupees: (NOT Applicable)

8.2.2 For Payment of consumable spares and consumables for first 12 months of warranty period in Indian Rupees:

100% value of the consumable spares and consumables and 100% taxes and duties and other charges shall be made within 21 days of receipt and acceptance of materials at consignee's end.

8.2.3 For Payment of spares and consumables for 7 years after the warranty period of 12 months in Indian Rupees under Spares Cost Cap:

100% value of the spares and consumables and 100% taxes and duties and other charges shall be made within 21 days after receipt and acceptance of materials at consignee's end.

8.2.4 Submission of Documents for Payment for equipment in Indian Rupees: (NOT Applicable)

8.2.5 Submission of Documents for Payment in Indian Rupees for consumable spares and consumables during warranty period.

For payment for consumable spares and consumables in Indian Rupees, the supplier will submit the following documents along with bills to the paying authority:

a. Two copies of the Supplier's invoice, Pre-Receipted and Stamped showing Contract Number, Goods description, quantity, unit price, total amount and GST No. of Ultimate Consignee.
b. Copy of Receipted Challan/ Consignment Note of all the consignments.
c. Equipment Manufacturer's / Supplier's Warranty /Guarantee Certificate as per GCC Clause-13.2 & 13.5.
d. The following Lowest Price Certificate as per SCC clause - 9.3 :
"We certify that prices for the items supplied are the lowest and not higher than as applicable to any Organization / Ministry / Department of the Govt. of India or Coal India Ltd. and/or its Subsidiaries or other PSU or any other private organization and it will be our responsibility to inform the Purchaser in case items are supplied at a lower price".
e. The following Price Fall Certificate as per SCC Clause- 9.3 "
"We certify that we have not offered to supply / supplied the ordered / similar item(s) at a lower rate to any Organization / Ministry / Department of the Govt. of India or Coal India Ltd. and/or its Subsidiaries or other PSU or any other private organization during the currency of the Contract".
f. Any other document(s) required as per contract.

8.2.6 Submission of Documents for Payment in Indian Rupees for spares and consumables during 2nd year to 8th year of operation under Spares Cost Cap:

For payment for Spares and consumables under Spares Cost Cap in Indian Rupees, the supplier will submit the following documents along with bills to the paying authority:

a. Two copies of the Supplier's invoice, Pre-Receipted and Stamped showing Contract Number, Goods description, quantity, unit price, total amount and GST No. of Ultimate Consignee.
b. Copy of Receipted Challan/ Consignment Note of all the consignments.
c. Equipment Manufacturer's / Supplier's Warranty /Guarantee Certificate as per GCC Clause-13.2 & 13.5.
d. The following Lowest Price Certificate as per SCC clause - 9.3 :
"We certify that prices for the items supplied are the lowest and not higher than as applicable to any Organization / Ministry / Department of the Govt. of India or Coal India Ltd. and/or its Subsidiaries or other PSU or any other private organization and it will be our responsibility to inform the Purchaser in case items are supplied at a lower price".
e. The following Price Fall Certificate as per SCC Clause- 9.3
"We certify that we have not offered to supply / supplied the ordered / similar item(s) at a lower rate to any Organization / Ministry / Department of the Govt. of India or Coal India Ltd. and/or its Subsidiaries or other PSU or any other private organization during the currency of the Contract".
f. Certificate that the spares and consumables being supplied during the …th year of operation and for which payment is being sought, has not crossed the cumulative Spares Cost Cap value of the …th year of operation of the Machine Sr. No.….
g. Any other document(s) required as per contract.

8.3.1 For Payment of equipment in foreign Currency

i) An unconfirmed, irrevocable letter of credit will be established for net CIF value after deducting Indian Agency Commission, if any from the CIF value.

ii) 80% payment of the net CIF value will be made through unconfirmed, irrevocable letter of credit against submission of:
   A. shipping documents;
   B. Self-attested copy of acceptance letter of the PBG as per Clause 2, SCC, Sec-IV by the concerned subsidiary **OR** Self-attested copy of acceptance letter of the extended SDBG as per Clause 1.11, SCC, Sec-IV by CIL or letter for deduction of equivalent amount from their bills.
   C. Copy of Receipted Challan/ Consignment Note of all the consignments.

iii) Balance 20% of the net CIF value will also be paid through same unconfirmed irrevocable, letter of credit against submission of successful commissioning certificate, signed by the concerned officials of the Project and counter-signed by the Area General Manager and HOD of Excavation Deptt. of the subsidiary company, where the equipment has been deployed.

iv) The Marine freight and Marine Insurance charges shall be paid at actuals subject to ceiling of the quoted amounts.

All bank charges incidental to opening of letter of credit in purchaser's country shall be borne by purchaser and all charges in the seller's country shall be borne by the beneficiary.

The letter of credit shall not be confirmed. In case the Supplier insists for confirmation of the letter of credit, the cost of confirmation shall be borne by the Supplier.

L/C shall be opened by the paying authority of the concerned subsidiary.

L/C shall allow partial shipment and trans-shipment

INR Component of Equipment

80% payment of the INR component of CIP value of the equipment and 100% taxes but excluding erection and commissioning charges shall be made within 21 days after receipt and acceptance of equipment at site at the consignee's end and submission of either (a) Performance Bank Guarantee having validity till 3 months after the completion of 8 years from the date of commissioning of all the equipment covered in the contract; or (b) Copy of validity extension of SDBG, in case SDBG is converted into PBG at the option of the supplier, till 3 months after the completion of 8 years from the date of commissioning of all the equipment covered in the contract. In case of non-submission of PBG or converted SDBG, payment may be made after deducting equivalent amount as PBG on specific request of the Supplier.

Balance 20% of the INR component of CIP value including erection and commissioning charges shall be made after successful completion of erection, testing, commissioning and final acceptance of the equipment (along with the accessories) upon presentation of successful commissioning certificate, signed by the concerned officials of the Project and counter-signed by the Area General Manager and HOD of Excavation Deptt. of the subsidiary company, where the equipment has been deployed.

The Inland freight charges and Insurance charges shall be paid at actual subject to ceiling of the quoted rate/ price quoted under these heads.

Tata Hitachi Construction Machinery Co. Pvt. Ltd.

8.3.2 For Payment of consumable spares and consumables for first 12 months of warranty period in foreign Currency: (NOT APPLICABLE)

8.3.3 Submission of Documents for Payment in foreign Currency for equipment

For 80% Payment:

For Payment for equipment in foreign Currency, the supplier will submit the following documents along with bills to the bank for negotiating L/C:

a. Two (2) copies of the Supplier's shipping invoice showing Contract Number, Goods description, quantity, unit price, total amount and GST No. of Ultimate Consignee.

b. Two (2) copies of the clean on-board bill of lading and four (4) copies of non-negotiable bill of lading. Importer Exporter Code (IEC) of concerned subsidiary Co. should be mentioned in Bill of Lading.

c. Two (2) copies of packing list identifying contents of each package.

d. Equipment Manufacturer's Warranty /Guarantee Certificate as per Technical Specification Clause-C.9 .

e. Manufacturer's Test & Inspection Certificate

f. The following Lowest Price Certificate as per SCC clause - 9.3 :
"We certify that prices for the items supplied are the lowest and not higher than as applicable to any Organization / Ministry / Department of the Govt. of India or Coal India Ltd. and/or its Subsidiaries or other PSU or any other private organization and it will be our responsibility to inform the Purchaser in case items are supplied at a lower price".

g. The following Price Fall Certificate as per SCC Clause- 9.3 "
"We certify that we have not offered to supply / supplied the ordered / similar item(s) at a lower rate to any Organization / Ministry / Department of the Govt. of India or Coal India Ltd. and/or its Subsidiaries or other PSU or any other private organization during the currency of the Contract".

h. Certificate of Country of Origin issued by the Chamber of Commerce of Manufacturer's Country.

i. Self-attested copy of acceptance letter of the PBG as per Clause 2, SCC, Sec-IV by the concerned subsidiary **OR** Self-attested copy of acceptance letter of the extended SDBG as per Clause 1.11, SCC, Sec-IV by CIL or self-attested letter for deduction of equivalent amount from their bills.

j. A certificate that no commission is payable by the principal supplier to any agent, broker or any other intermediary against this contract other than -----% of FOB value of the contract to M/s. -----(Indian Agent).

k. Copy of Goods Consignment Note supported by Challans of all the consignments, duly receipted by consignee, with the certificate from supplier that all the consignments for commissioning of complete equipment have been delivered

l. Copy of Certificate of Insurance.

m. Documentary evidence for Marine freight and marine Insurance.

n. Any other document(s) required as per contract

For 20% Payment:

a) Self-attested copy of commissioning certificate, signed by the concerned officials of the Project and counter-signed by the Area General Manager and HOD of Excavation Deptt. of the subsidiary company, where the equipment has been deployed.

8.3.4 Submission of Documents for Payment in foreign Currency for consumable spares and consumables during warranty period(NOT APPLICABLE)

8.4 **Payment for Indian Agency Commission (GCC Clause-14.2)** – There is no Indian Agency Commission Involved.

8.5 Paying Authority

The Paying Authority shall be General Manager (Finance), of the concerned subsidiary.

The payments will be made by the Paying Authority to the manufacturer and / or Indian agent shall be per the Bank Details for Electronic Payment [Annexure-4]. The same is enclosed.

This is against Budget Certification as under:-

Budget Details of SECL:

Head Capital item

No	Unit/Area	Head	Year	Amount in ₹
221	GEVRA PROJECT	P&E Hemm	2025-26	73,00,81,649.80
30-05-2025				
Plant Code	SECL8652			
Commitment Item	4100			**73,00,81,649.80**

Revenue:- Advance BC
SECL/GM(F)/CONS.HEMM SPARES/BC/GEVRA /2026-27 TO 2032-33/50/01 dated 30.05.2025
Amount- **154,90,42,486.00**

9 Prices

9.1 Prices stated in the contract shall remain firm and fixed throughout the period of the Contract.

9.2 Lowest Price Certificate

The Supplier shall submit a certificate that prices for the items supplied are the lowest and not higher than as applicable to any Organization / Ministry / Department of the Govt. of India or Coal India Ltd. and/or its Subsidiaries or other PSU or any other private organization and it will be our responsibility to inform the Purchaser in case items are supplied at a lower price.

9.3 Price Fall Clause

If the contract holder reduces its price or sells or even offers to sell the contracted goods or services following conditions of sale similar to those of the contract, at a price lower than the contract price, to any person or organization during the currency of the contract, the contract price will be automatically reduced with effect from that date for all the subsequent supplies under the contract and the contract be amended accordingly.

The provisions of price fall clause will however not apply to the following:
i) Export/Deemed Export by the supplier;
ii) Sale of goods or services as original equipment prices lower than the price charged for normal replacement;
iii) Sale of goods such as drugs, which have expiry date;
iv)Sale of goods or services at lower price on or after the date of completion of sale/placement of order of goods or services by the authority concerned, under the existing or previous Rate Contracts as also under any previous contracts entered into with the Central or State Government Departments including new undertakings (excluding joint sector companies and or private parties) and bodies

Note:
a. The currency of contract will mean the period till completion of supply.
b. It shall be responsibility of the supplier to inform the purchaser of offer to supply / supply of the ordered / similar item(s) at a lower rate to any Organization / Ministry / Department of the Govt. of India or Coal India Ltd. and/or its Subsidiaries or other PSU or any other private organization during the currency of the contract.
d. The supplier shall submit a certificate along with the bill(s) that it has not offered to supply / supplied the ordered / similar item(s) at a lower rate to any Organization / Ministry / Department of the Govt. of India or Coal India Ltd. and/or its Subsidiaries or other PSU or any other private organization.

10. Taxes and Duties (GCC Clause-26)

10.1 The following sub-clause is added to Clause-26, GCC :

Applicability of GST on Liquidated damages, EMD and/or Security Deposit forfeiture:

GST shall not be applicable on Liquidated damages, EMD and/or Security Deposit forfeiture

11. Changes in Order (GCC Clause 15)

The Purchaser may at any time, by a written order given to the Supplier, make changes within the general scope of the Contract in any one or more of the following:

a) the place of delivery; and/or
b) the place of Services to be provided by the Supplier.

12. Provisions of CIL's Purchase Manual (GCC Clause 30)

The provisions of CIL's Purchase Manual and its subsequent amendments (Available on CIL's website, www.coalindia.in) prevailing on the date of opening of tender shall also be applicable, if not specified otherwise in this Contract.

Tata Hitachi Construction Machinery Co. Pvt. Ltd.

Schedule of Requirements

Schedule of Requirements

Part I

Sl. No	Brief Description of Goods & Services	Quantity	Expected Delivery schedule at Site
1	21 CuM Electric Hydraulic Face Shovel as per design criteria given in Part-D, Clause 3 of Technical Specifications. Make – M/s Hitachi Construction Machinery Co., Ltd., Japan Model: EX3600E-6	**02 nos.**	At least 01 (one) machine within 15 months from the date of signing of Contract. Thereafter next machine in subsequent 02 (two) months. **Project wise Allocation:** Gevra OCP, SECL – 02 nos. Adjustment to the excess supplies, if any, made against the above delivery schedule is admissible in case of subsequent short supplies.
2	AFDSS and other commissioning requirements as per Annexure – 6 of the NIT (contract), if any, and Ancillary Equipment for each equipment of SI. No. 1 (above), as specified in Technical Specifications.	In accordance with SI. No. 1 (above)	Delivery to be made along with the Machine.
3	Provision of spare parts; - Operational, Maintenance and Standby/Contingency spare parts, consumable items, wear materials, maintenance tools, special tools in accordance with Part C.6 of the Technical Specification. The cost of Spare Parts requirement shall be quoted separately for each equipment.	**08 (01+07) years**	To comply with the terms of part C.6 of Technical Specifications, and in consideration of SI. No. 1 and 2 above. The delivery of spare parts and consumables should be made as follows: a) Consumable spares and consumables required for first 12 months of warranty period– to be supplied in two lots within six months from the date of commissioning of the first equipment. No consumable spares and consumables of warranty period will be accepted after completion of 12 months of warranty period. b) Spares and consumables required from 2nd to 8th year of operation from the date of commissioning of the equipment– To be supplied as per requirement of the user under Spares Cost Cap.

The quantities of equipment allocated to the mine projects are as follows:

Sl. No.	Name of Project	Company	Consignee Address	Total Requirement (Under NCD)
1	Gevra OCP	South Eastern Coalfields Limited	Depot Officer, Gevra Area, South Eastern Coalfields Limited, P.O. Gevra, Distt. Korba, Chattisgarh, India, Pin- 495452	02 nos.
TOTAL				02 nos.

Delivery Terms

In case of Import Order: On CIP (Final Place of Destination) basis.

In case of Indigenous Order: On FOR Destination basis / Free Delivery at Site basis.

Delivery Schedule: Delivery schedule as indicated above, shall reckon from the date of Contract.

Final Place of Destination / FOR Destination / Free Delivery at Site/ Ultimate Consignee

The Projects indicated above are the Final Place of Destination/ FOR Destination / Free Delivery at Site for the purpose of delivery. The consignee mentioned therein is the ultimate consignee.

Port Consignee:

GM(MM),
Material Management Division
Coal India Limited,
"Coal Bhawan",
Plot No. AF III, Action Area 1A
New Town, Rajarhat
Kolkata - 700 156
Telephone No. (033) 23244127
Fax: (033) 23244115
Email: gmmm.cil@coalindia.in
Website: www.coalindia.in

All activities to clear through Customs and transport to Final Place of Destination will be undertaken by the Supplier at its cost. The purchaser will pay customs duties only applicable to imported goods.

Country of Origin: Japan

Port of Shipment/ Loading: Hitachinaka/Kobe/Yokohama, Japan Sea Port

Port of Arrival in India: Ennore/ Chennai/Kolkata/Mumbai/Paradip/ Haldia, India Sea Port

Final Place of Destination / FOR Destination / Free Delivery at Site/Ultimate Consignee

The Project indicated above are the Final Place of Destination/ FOR Destination/ Free Delivery at Site for the purpose of delivery. The consignee mentioned therein is the ultimate consignee.

Tata Hitachi Construction Machinery Co. Pvt. Ltd.

Part II

Sl. No.	Brief Description of Services	Period/Quantum
1	Training of Purchaser's Personnel at Project Site / Manufacturer's Training Facility available in India	Please refer to Schedule of Requirements of Services later in this Section and to the Technical Specifications.
2	Assembly and erection of equipment at Site in accordance with the Technical Specification and Conditions of Contract.	**As given in Annexure - (k)**

Schedule of Requirements of Services

The Supplier's scope of the Contract will include the following

I. Type test on each equipment included in the technical specification and offered in the bid.

II. Providing Services of Supplier's qualified engineer(s)/personnel and manpower (skilled/semi-skilled/non skilled) for:

A. Unloading, transportation to site, storage at site and/or

B. Transportation from storage to erection site, installation, testing and commissioning.

III. Training of Purchaser's Personnel:

The Purchaser's estimates of the minimum training requirements within warranty period, (in terms of Purchaser's personnel, periods and locations) are given in the following table. These estimates relate to each equipment as specified in Part I

Training schedule per machine (as per schedule of requirement)

Type of Personnel	At Manufacturer's training facilities available in India					At Site				
	No	Period		Total		No	Period		Total	
Mech Engineer	01	01	week	01	week	01	01	Week	01	Week
Elec Engineer	01	01	week	01	week	01	01	Week	01	Week
Mech Supervisor	01	01	week	01	week	01	01	Week	01	Week
Elec Supervisor	01	01	week	01	week	01	01	Week	01	Week
Mech Fitter	00	00	week	00	week	03	01	Week	03	Weeks
Electrician	00	00	week	00	week	03	01	Week	03	Weeks
Operator	00	00	week	00	week	03	01	Week	03	Weeks
Total	04			04	weeks	13			13	weeks

Definitions:

Mech/Elect Engineer- Graduate Engineer having basic knowledge of the equipment

Elect/Mech Supervisor - Diploma Holder Engineer having basic knowledge of the equipment

Mech Fitters/Electricians/Operators- Un-skilled, semi-skilled and skilled.

Tata Hitachi Construction Machinery Co. Pvt. Ltd.

Note:- The training shall be completed in batches within warranty period from the date of commissioning of first equipment in the respective project.

IV. **Provision of additional training within the contract period after completion of warranty period.**

i. Supplier shall impart training to the CIL personnel, in addition to the contractual training provision, after completion of warranty period but at any time within the contract period.

ii. The additional training will be as per requirement of the user and shall cover the training scope same as per the mandatory training (within warranty period) of the contract.

The training will be on chargeable basis and additional payment to the supplier will be made at the same rates which have been indicated for mandatory training.

Tata Hitachi Construction Machinery Co. Pvt. Ltd.

Technical Specifications

Technical Specifications

Introduction

The Technical Specifications are presented in four parts as follows:

A. Scope of Supply
B. Specific Project Requirements
C. General Requirements
   1) Geography and Climatic Conditions
   2) Goods (Equipment and Machinery)
   3) Services
   4) Standards
   5) Supplier's Responsibility
   6) Spare Parts Provisions
   7) Availability Provisions
   8) Deemed Breakdown
   9) Composite Warranty / Guarantee
   10) Quality Assurance
D. Equipment Specifications

Tata Hitachi Construction Machinery Co. Pvt. Ltd.

Part A

Scope of Supply

A.1 Equipment Package

The Supplier is required to provide a complete package of equipment for the supply of 21 CuM Rated Bucket Capacity Electric Hydraulic Face Shovel to opencast (surface) coal mining projects as per the Technical Specifications provided in Part D.

The supplier is required to supply the equipment along with accessories, consumables, training, installation, commissioning and testing at the coal mining project.

The package also includes Consumable Spares and Consumables including oils, greases, lubricants, all GETs for 12 months of warranty period from the date of commissioning of the equipment and thereafter Spares & Consumables for a period of 7 years under Spares Cost Cap.

For Electrical Hydraulic Face Shovel, 300 Mtr. trailing cable and suitable Field Switch as per Technical Specification mentioned in Clause D.5.3 & D.5.5 of Part D, shall be supplied initially along with the equipment as commissioning item.

The Scope and Phasing of supply for the Electrically Powered Hydraulic Face Excavator with bucket capacity 21 CuM is given in Schedule of Requirement.

A.2 Supplementary Items

The equipment shall be provided with a comprehensive tool kit which shall include any special tools required for erection and commissioning of equipment.

Detail given in Annexure – (a)

A.3 Information and Drawings

At least one month before the scheduled installation date, the Supplier shall provide not less than:

(a) Suitably illustrated copies of Operating, Repair and Maintenance Manuals for each type/model of equipment and accessories, written in English language, substantially bound in book form;

One hard copy along with soft/digital copy to each project site; and

Soft/digital copy of the same to the General Manager (Excv.)/HOD, Subsidiary Hqrs. and General Manager (EED), Coal India.

(b) Suitably illustrated copies of detailed Spares Parts Manuals for each type/model of equipment and accessories, written in English language, substantially bound in book form;

One hard copy along with soft/digital copy to each project site; and

Soft/digital copy of the same to the General Manager (Excv.)/HOD, Subsidiary Hqrs., General Manager (EED), CIL; General Manager (MM)/HOD subsidiary Hqrs and General Manager (MM)/HOD, CIL.

In addition to the Equipment drawings, where appropriate the Supplier shall supply detailed relevant drawings (in the same number of copies) illustrating erection/assembly site(s), foundation and accommodation requirements for such items as drive motors, switch installations etc.

A.4 Erection/Assembly, Commissioning and Performance Testing:

The Supplier shall provide the Services of Specialist Technicians (refer Part – C.3) and required manpower (skilled/semi-skilled/unskilled) to undertake the installation/erection/assembly, commissioning and performance testing of the Equipment and accessories supplied.

The technicians shall remain at site following commissioning and train all necessary personnel to make them conversant with the maintenance and operation of the equipment.

A.5 Training:

A.5.1 Compulsory Training

The training shall be completed in batches within warranty period from the date of commissioning of the equipment in the respective project. The supplier in consultation with the project in-charge / HOD [Excavation] of the respective site shall make available experienced personnel to conduct training of engineers, supervisors, technicians and operation personnel for specified period as mentioned in table given in 'Schedule of Requirement of Services' from the date of issue of acceptance certificate of the equipment. The training shall cover the following:

a) Training on simulator module by the Supplier at their works/suitable location in India/suitable end user's location is mandatory.
b) Equipment system, safety and risk assessment.
c) Equipment operation and maintenance.
d) Trouble shooting, localization of fault and their remedies covering:
    1. Electrical and electronics
    2. Mechanical
    3. Hydraulic system
    4. Lubrication system
    5. Pneumatic system etc.
e) Training on maintenance of OEM's bought out systems, e.g., transmission, hydraulic aggregates / system, electrical drives system etc., by the manufacturer of the system.
f) Training on Digital system of the equipment including OBD (on board display) and communication port data management, Health and productivity management system of the equipment.

Comprehensive training manuals with clear illustration shall be provided to each participant in English language. The training courses shall be conducted in both English and Hindi language.

Details of purchaser's estimates of the minimum training programme required per equipment is described in Schedule of Requirement.

A.5.2 Additional training within the contract period after completion of warranty period

(a) Supplier have given an undertaking in their bid to impart training to the CIL personnel at any time within the contract period after completion of warranty, in addition to the compulsory training as per provision of clause A.5.1.
(b) The additional training will be as per requirement of the user and the scope of training will be same as per the compulsory training provision of clause A.5.1.
(c) The training will be on chargeable basis and additional payment to the supplier will be made at same rate what individual supplier will be charged for compulsory training.

Tata Hitachi Construction Machinery Co. Pvt. Ltd.

Part B

Specific Site Requirements

B.1 Project Specific Requirements:

The equipment shall be suitable for use at the specific site projects under the conditions detailed below.

B.1.1 GEVRA OCP, SECL

The Gevra Opencast Project is owned by the South Eastern Coalfields Limited, a wholly owned subsidiary of Coal India Limited (the "Purchaser"). The mine is located partly in the Korba District of Chattisgarh. The nearest rail head is Gevra Road station on Champa – Gevra Road branch line of the South Eastern Railway Network.

Geological Conditions

Lateritic soil and sub soil, fine to coarse sandstone, sandy shale and carbonaceous shale.

Water Supply

Hasdeo river is the main source of water supply which is approximately 10 Km from mine site.

Tata Hitachi Construction Machinery Co. Pvt. Ltd.

Part C

General Requirements

C.1 Geography and Climatic Conditions

Elevation:-

The natural surface varies from 100 to 1000 m above mean sea level.

Climate:-

The climate of the coal mines, where the equipment will be deployed, is sub-tropical to tropical, dusty, with a hot and humid atmosphere. Monsoon rains occur in the period from June to October.

Ambient Conditions:-

Relative Humidity	-	Maximum 98%
Temperature	-	Minimum 0° C
		Maximum 50° C

Rainfall: - The mean annual rainfall is 1,000mm - 1200mm, 90 to 95 % of which may fall in rainy season from June to October.

Wind:- April to September	-	South to South Westerly
October to March	-	North Westerly

Speed: -- 8 km per hr average

\- 100 km per hr maximum

C.2 Goods (Equipment and Machinery)

Detailed specifications of the Equipment to be supplied are given in **Part D** of this section.

In general, all items shall be:

- New, unused, of the current design [incorporating latest proven features] and not likely to be discontinued or become obsolete during the lifetime of the equipment.
- Designed and constructed to handle without overload and for the working hours stated, the maximum volumes/rates specified;
- Designed to facilitate ready access, cleaning, inspection, maintenance and repair of component parts;
- Designed to facilitate rapid changeover of consumable items.

The supplier shall ensure that suitable latest technology available worldwide as on date shall be adopted in the quoted model of equipment and shall not be discontinued during life time of equipment. However, in case, technical up-gradation is unavoidable, the same may be adopted in the supplied model of equipment with due clearance of Head of Excavation department of Subsidiary Co. Supplier shall not seek any technical modification / up-gradation at the cost of buyer before completion of 07 years from the date of completion of guaranteed availability contract period of the equipment except, when any modification / up-gradation is required for compliance of any statutory guideline issued from regulatory body of Govt. of India, DGMS, State Authority etc.

The component parts of all items shall, wherever possible, be selected from the standard ranges of reputable manufacturers.

Tata Hitachi Construction Machinery Co. Pvt. Ltd.

The Equipment and accessories shall be physically robust and where necessary capable of dismantling for transportation and ready re-assembly using simple tools. All Equipment items provided shall be designed to be compatible within the proposed overall Scope of Supply.

Electrical Equipment shall provide all protection devices, controls and interfaces for the Equipment to operate safely and efficiently.

All workmanship and materials shall be of first class quality in every respect.

All parts and surfaces, which are exposed to corrosive environment, shall be suitably protected to prevent any effects of corrosion or erosion.

C.3 Services

The supplier shall be responsible for the erection, testing and commissioning of the equipment at site for which the supplier shall depute qualified and competent Engineer(s) and specialist technicians.

C.4 Standards

The design, supply, erection, testing and commissioning of all Equipment under this Contract shall in all respects comply with the requirement of this specification and with the appropriate current Indian standards and codes, or relevant Standards issued by the Indian/International Standards Organization or any other equivalent international standards, which corresponds to specific IS/ISO indicated in the technical specification. Such equivalent international standards are to be supported by documentary evidence certifying that offered standards are identical to the corresponding IS/ISO.

The equipment shall comply with requirements of the statutory government authorities, including Director General of Mines Safety (DGMS) having jurisdiction over the equipment and its use.

The system of units for all measurements shall be the **Système International (d'unités)(S.I.)**

C.5 Suppliers Responsibility

The Purchaser requires that the Supplier shall accept responsibility for the provision of complete operable and compatible Equipment and systems within the Scope of Supply. This document identifies only the major items required for the installation and the Supplier shall ensure that the total supply includes all necessary Equipment for it to function effectively, safely and efficiently. Any additional items the Supplier considers necessary to ensure compliance with such a requirement shall be identified and included.

The Supplier shall be responsible for the erection, testing and commissioning of the Equipment and ensure that it meets the requirements as specified. The commissioning and setting to work of the whole Equipment Supply package shall be carried out by the Supplier in conjunction with the Purchaser's nominated personnel.

C.6 Spare Parts Provisions

C.6.1.a. Availability of Spare Parts

All items and Equipment proposed shall be of current design and manufacture. The Supplier shall warrant that sufficient spares and servicing facilities will be available to maintain the Equipment in use throughout its life.

C.6.1.b Bought-out assemblies and sub-assemblies

Detail are given in Annexure – (b)

C.6.2 Provision of Spare Parts

C.6.2.1 Within the Contract Price, the Purchaser shall agree to purchase all Operational, maintenance and standby/contingency spare parts, consumable items, wear materials, maintenance tools and special tools (hereinafter collectively referred to as "Spare Parts", unless the context requires otherwise) in accordance with the Supplier's recommendations for 08 years from the date of issue of the Commissioning Certificate. Similarly, within the Contract Price, the Purchaser shall also agree to purchase consumable items (hereinafter referred to as "Consumables") in accordance with the Supplier's recommendations for 08 years from the date of issue of the Commissioning Certificate. The schedule of supply of spares and consumables shall be as indicated in Schedule of Requirement. In addition, the Supplier shall provide Spare Parts and Consumables for Commissioning.

Consumables shall include items such as oils, lubricants and fluids also. Trailing cable is not included in consumables.

The supplier shall submit a separate schedule showing consumable spares and consumables proposed to be supplied by them in the 1st (twelve) months period for each equipment from the date of commissioning of equipment as per 'Schedule of Requirement' to comply with the provisions herein contained.

Management and storage of spares and consumables from 2nd year of operation from the date of commissioning onwards (i.e. after completion of warranty period) till completion of contract period will be under the scope of the supplier. The Spares Cost Cap shall be equipment-wise for each equipment. The modalities of operation of Spares Cost cap model shall be as follows:

i) Reconditioned/Repaired/Refurbished spares/assemblies/sub-assemblies will not be supplied under Spares Cost Cap.

ii) The Spares Cost Cap shall be in Indian Rupees (INR) only and exclusive of estimated GST. Estimated GST shall also be indicated separately. The Spare Parts Stores/facility to be operated by the Supplier shall be GST registered storage facility or else the supplier will have to get the Stores/facility registered with GST authorities at least before commencement of Spares Cost Cap in the 2nd year of operation of the first equipment commissioned.

iii) The supplier shall submit the comprehensive Price List at least 6 months prior to the 2nd year of operation of the first equipment commissioned (in hard copy duly signed as well as in soft copy), covering all the spares and consumables and assemblies / sub-assemblies etc. required during lifetime of the equipment to CIL. CIL will examine the same with respect to any other Price List, if available, applicable on the first date of applicability like Depot Agreement Price List / RC prices etc. and after its approval, circulate the approved Price List to the concerned subsidiary HQ and mines/projects. This list may be different from the Depot Agreement price list to the extent that the Price List under Spares Cost Cap will be comprehensive one including all bought out items, oils and lubricants etc. whereas the Depot Agreement Price List normally excludes these items. The approved Price List will be valid at least for a period of one year from its applicable date. If any item appears in this Price List as well as in the Depot Agreement Price List / RC price list / any other approved Price List of the same firm for other equipment, the lowest price will be applicable against all such lists. The time period for such circulation of approved Price List shall be about 3 months prior to the 2nd year of operation of the first equipment commissioned. In case of delay in circulation of the approved Price List, the Supplier may continue to supply the items as per the Price List submitted to CIL but these provisional rates will be regularized subsequently when the approved Price List is circulated by CIL.

iv) For subsequent years during the contract period, the supplier may continue with the same approved Price List or submit the next Price List (in hard copy duly signed as well as in soft copy) which may include items with alternate part nos., if any. However, no new item shall be included. If a new Price List is submitted, it should be submitted at least 6 months prior

to the applicable year of operation of the first equipment commissioned to CIL along with the statement of increase / decrease in item-wise prices from the previous approved price list with proper justification for increase in prices. CIL shall examine the same especially in relation to the increase with the previous year etc. and after its approval, circulate the approved Price List to the concerned subsidiary HQ and mines/projects. The time period for circulation of approved Price List shall be approximately within 3 months after receipt of the new Price List. In case of delay in circulation of the approved Price List, the Supplier may continue to supply the items as per the previous approved Price List in operation but these provisional rates will be regularized subsequently when the approved Price List is circulated by CIL.

Further, if for the compliance of any statuary, regulatory or environmental regulation or guidelines from DGMS or other institutions / GOI, the new parts for compliance of such regulations may be included in the price list with documentary evidence related to implementation of such guidelines. Otherwise, no new item will be included.

v) For items, which are not covered in the approved Price List(s), but need to be supplied, the supplier shall supply the same free of cost during the complete period of contract.

vi) The Supplier will assess the requirement of spares and consumables for the particular year of operation and submit the list of spares and consumables including quantity to the Excavation Engineer In-Charge of the Mine/Project, 3 months in advance of the respective year of operation. The Excavation Engineer In-Charge, after verifying that the same is in order, shall send the same to the Excavation Engineer In-Charge of the Area. The Area, shall proceed to place an Open Provisional Purchase Order, based on the prices as per available Price List, through the Area Purchase Cell on the Supplier within the Spares Cost Cap Value of the particular year. For placing the Open Provisional Purchase Order by the Area Purchase Cell, no formal approval is required. If any item is not appearing in the Price List, it will be supplied on FOC basis.

vii) Once the Open Provisional Purchase Order is placed by the concerned Area Purchase Cell, it is the responsibility of the Supplier to ensure that these spares and consumables are made available to the mine / project as and when required.

viii) Fortnightly Inspection Report(s) regarding the health of the equipment including all safety features etc. will be prepared jointly by the Supplier and the Excavation Engineer-In-Charge of the Mine/Project for short term and long term planning for requirement of spares and consumables and these joint Inspection Reports will be the basis for assessment and confirmation of requirement of spares and consumables under Spares Cost Cap.

ix) Based on the requirement generated as per the fortnightly Inspection Report(s), the Area Excavation Engineer-in-Charge will send to the Area Purchase Cell, the complete details of those spares and consumables against the Open Provisional Purchase Order, which are required for the month/quarter depending on the nature of equipment. The Area Purchase Cell shall thereafter proceed to place Formal Order on the Supplier within 10 days with the concurrence of Area Finance and approval of Area GM. In case the items are not covered in the Open Provisional Purchase Order but the prices are indicated in the approved Price List, the same may also be taken into consideration as long as the limit for Spares Cost Cap is not exceeded. The delivery of the spares and consumables to the Regional/Area Stores shall be made thereafter within 15 days. The materials shall be routed through Regional/Area Stores of the concerned Area (not unit stores / charged off stores). The procedure for acceptance of materials, lifting of materials from Stores, use in the machine and payment to be made shall be as follows:

a) The supplier will supply the requisitioned spares and consumables along with copies of GST Invoices, delivery challans etc. to the Consignee duly indicating part no. description, quantity etc.

b) The Regional/Area Stores will enter the receipt of the items in the concerned register and arrange for inspection of the items by the concerned Area Engineer(s) or his authorized representative(s). On acceptance of the material, the Stores Receipt Voucher (SRV) will be raised by the Regional/Area Stores. The materials will then be moved from the Receipt Section to the Issue Section.

c) Based on requisition from the concerned Mine/Project Engineer(s), the Regional/Area Stores will issue the materials and complete the paper formalities for issue of the items.

d) Once the materials have been issued, the concerned Mine/Project shall keep record of the same when the material is used on the machine. All concerned details shall be recorded in a register (which may be in electronic form) to be maintained by the Excavation Engineer In-charge of the Mine/Project.

e) The Regional/Area Stores after issuance of SRV, shall send a copy of the SRV and other related documents like invoices, guarantee/warranty certificate etc. to the Area Finance dept. for payment purposes. A copy of the same will also be sent to the concerned Area Excavation Dept. for maintaining the records in respect of Spares Cost Cap value.

f) The Finance dept. at the Area will then verify the documents and thereafter send the same to the Paying Authority of the concerned subsidiary for payment. Once the payment is made, the Excavation dept. at the subsidiary / area / mine /project will be informed so that the equivalent amount may be reduced from Spares Cost Cap value for the particular year.

x) The unutilized Spares Cost Cap value for each year will be carried forward to the subsequent year till completion of contract. However, the unutilized value of Spares Cost Cap, if any, at the end of the contract, will lapse.

xi) In case of total value of spares and consumables for a particular year exceeding the Spares Cost Cap of a particular year, the additional spares and consumables shall have to be supplied on FOC basis. The procedure for accounting and maintenance of records to be followed for FOC supplies will also be the same as above.
In case the working hours of the equipment cross more than 10% of maximum expected working hours (5000 ± 500) in a particular year, (i.e. 5500 +550 = 6050 hours in this case), the cost cap value of immediate succeeding year may be utilized in the immediate preceding year to the extent of 10% value of the succeeding year for the purpose of overhaul of major assemblies. However, payment of such cost of spares and consumables shall only be paid in the subsequent year.

xii) The supplier shall stock & maintain sufficient inventory of spares and consumables, required for all kinds of maintenance and repairs of equipment during complete contract period.

xiii) The payment during the relevant year of operation shall be made as per the prevailing approved price list for Spares Cost Cap only. The payment by the Paying Authority of the concerned subsidiary shall be made within 21 days of receipt and acceptance of materials at Regional/Area Stores and after receipt of documents stipulated in the SCC.

xiv) Statement of consumption of spares and consumables with quantity and value for each month of the respective year of the Spares Cost Cap, shall be signed by the Mine/Project Excavation Engineer-In-Charge and the concerned representative of the Supplier. It shall be maintained by the Mine/Project and a copy of the same shall be sent to Excavation Engineer-In-Charge of the Area and Subsidiary HQ. The annual report of the consumption shall be maintained by the Excavation Engineer-In-charge of the Subsidiary HQ.

C.6.2.2 In the event that the spare parts and consumables, as recommended by the Supplier, in any way fall short of actual requirements during the period for which they are said to be adequate, the supplier shall provide such additional spare parts and consumables as are necessary at the final destination. Such additional spare parts and consumables shall be provided by the Supplier to the Purchaser beyond the Spares Cost Cap value free of all cost and shall be

Tata Hitachi Construction Machinery Co. Pvt. Ltd.

transported to Site by air freight internationally and by air, rail or fast road transport within India.

C.6.2.3 In the event that the spare parts, Insurance items and consumables, as recommended by the Supplier, are in excess of actual requirements, the Purchaser will require the Supplier to repossess or repatriate or otherwise dispose of such excess spare parts and consumables in exchange for payment to the Purchaser of the Contract landed Price (with taxes and duties) of the spare parts and Consumables concerned.

The Purchaser shall notify the Supplier, in writing of its requirements under this Clause within thirty (30) days of completion of the contract period referred to in Clause C.6.2.1 hereof.

C.6.2.4. In the event that operation of the equipment is inhibited or frustrated as a direct result of lack of spare parts and consumables, pursuant to Clause C.6.2.2 hereof, then the period referred to in Clause C.6.2.1 hereof shall be extended by a period of not less than the period during which operation as aforesaid was inhibited or frustrated.

C.6.2.5. The supplier shall not be liable for the supply of additional spare parts and consumables, nor to extend the period referred to in Clause C.6.2.1 hereof, if and to the extent that, additional Spare Parts and Consumables are required by reason of unforeseen accidents, negligence or misuse on the part of the Purchaser.

C.6.2.6 The assessment of the Supplier of the spare parts requirements shall be based upon the expected working hours per year as defined in the individual Equipment Specifications included in the Technical Specifications.

In accordance with the provisions of clause D.8, Part-D of the technical specifications the expected working hours per annum is 5,000 (Five Thousand) hours for 20 CuM Elect. Hyd. Face Shovel(Make - Hitachi, Model – EX3600E-6, 21 CuM). The expected average working hours per annum as indicated are only approximate hours and may vary + 500 hours.

Total duration of contract will be 8 years for 20 CuM Elect. Hyd. Face Shovel (Make - Hitachi, Model – EX3600E-6, 21 CuM) irrespective of working hours.

In case, actual working hours of the equipment exceeds total 44,000 [(5500 x 8)= 44,000] hours during the tenure of 8 years (96 months) of contract period, then consumable items (as declared by the Supplier in the offer/Spares Cost Cap) will be procured by the purchaser from the Supplier.

C.6.3. **Emergency Spare Parts**

C.6.3.1. Emergency spare parts required by the Purchaser to repair breakdowns shall be dispatched to the site by the Supplier by the fastest, practicable means as directed from time to time by the Purchaser.

C.6.3.2. For the purpose of Clause C.6.2.6, "Emergency Spare Parts" shall mean those spare parts or components required by the Purchaser to repair any item of equipment supplied pursuant to the Contract in the event of a breakdown not attributable to a failure covered by guarantee or a failure of the Supplier to provide adequate Spare Parts or Consumables.

C.6.3.3 Payment in respect of the supply and delivery of such Emergency Spare Parts shall be made promptly, retrospectively, by the Purchaser, in a manner consistent with the terms of payment described in the contract.

C.6.3.4 **Lifetime Spare Parts**

The Supplier undertakes and guarantees to produce and maintain stocks, to be available for purchase by the Purchaser under separate agreement, of all Spare Parts and Consumables as may be required for maintenance and repair of the Plant throughout its working life. In the event that the Supplier wishes to terminate production of such Spare Parts, the Supplier shall:

(a) give not less than six months' notice in writing of its intention to terminate production in order to permit the Purchaser reasonable time in which to procure needed requirements; and

(b) immediately following termination, provide to the Purchaser at no cost, manufacturing drawings, material specifications and all necessary permissions to facilitate manufacture of the Spare Parts elsewhere.

(c) any change in part number or superseded part number should be informed to the HOD of Excavation department / MM department of subsidiary hqrs. and the project site wherever the equipment is operating.

In any event, the Supplier shall not seek to terminate manufacture of spare parts for a period of not less than 15 (fifteen) years from taking over or the life time of the equipment whichever is later.

C.6.4 Oils, Lubricants and Fluids

Details are given in Annexure - (c)

C.6.5 General

C.6.5.1 Nothing in this Clause C.6 shall relieve the Supplier of any Guarantee, Availability, Performance or other obligations or liabilities under this Contract.

C.7 Guaranteed Availability Provisions

Equipment	Minimum Annual Guaranteed Percentage (%) Availability	
Electric Hydraulic Face Shovel 21 CuM rated Bucket Capacity	1st to 4th Year	5th to 8th Year
	85%	84%

C.7.1 Introduction

C.7.1.1 The Supplier shall guarantee that the Equipment supplied pursuant to this Contract shall be available for use by the Purchaser and shall meet the performance criteria specifications at the level and in accordance with the terms and conditions of the Availability Guarantee herein contained.

C7.1.2 Where Equipment supplied under the Contract fails to meet the criteria of the Availability Guarantee, the Supplier shall, at its own cost, provide suitably qualified and experienced personnel at Site to demonstrate to the Purchaser's satisfaction that the required level of availability can be achieved and maintained.

C.7.1.3 The Supplier shall provide the Services of such personnel at Site within seven (7) days of notification by the Purchaser that the availability criteria have not been met in any one (1) month.

C.7.2 Guarantee

C.7.2.1 The Supplier shall guarantee that the Equipment supplied pursuant to the Contract shall be available to the Purchaser at the level hereinafter defined to perform to criteria of not less than that defined in the Technical Specifications incorporated in the Contract.

C.7.2.2 The Supplier shall guarantee that the Equipment shall be available to perform its duty to minimum criteria and to the minimum availability percentage level as defined in the individual Equipment specifications included in the Technical Specifications.

The method of assessment applied shall be as follows:

Method of Assessment:

The following calculation shall determine the availability of the Equipment:

$$\%\text{Availability} = \frac{\text{Scheduled Available Time - Downtime}}{\text{Scheduled Available Time}} \times 100$$

Scheduled Available Time shall equate to 24 hours daily.

Downtime:-

Downtime shall mean all hours of work lost due to mechanical, electrical or other failure, including:

a) Routine servicing and maintenance in accordance with the manufacturer's published recommendations, including :

Changing oils, oil filters and air filters; lubrication; changing identified consumable or wear parts.

b) Planned preventative maintenance programs;

It shall not however include:

I. Damage due to abusive use or incorrect operation methods by the purchaser;

II. Accidents;

III. Strikes or stoppage of work by the Purchaser's personnel;

IV. Natural disaster;

V. Lack of Spare Parts not attributable to a failure of the Supplier.

Note – For (I) & (II), a joint inspection report will be prepared with supplier within 3 days from the date of occurrence of incident and repairing works will be done in consultation with supplier

Downtime shall also specifically include all hours lost due to failures determined to be guarantee failures.

The Supplier shall provide a schedule of maintenance required to carry out (a) and (b) above for the contract period of operation and shall state the number of hours required to carry out each maintenance task. The time stated shall, with the agreement of the Purchaser, form the basis of the assessment of the availability.

This schedule of tasks and time will be reviewed periodically by the Purchaser and the Supplier, jointly, to monitor the practicality of the schedule.

The Purchaser will assist the Supplier, without relieving the Supplier of any other obligations under the Contract, to achieve the guaranteed availability by:

1. Providing normal and proper maintenance, including preventative maintenance in accordance with the Supplier's standard/published recommendations, and making all necessary repairs using only spare parts provided by the Supplier in accordance with the requirements specified in part C.6.

2. Providing co-operation to all Suppliers' authorized representatives, complying with all reasonable procedural suggestions to improve efficiency of machine operation or reduce downtime.

3. Where appropriate, providing and maintaining such conditions as:

   - Proper Electrical Supply
   - Terrain Area
   - Bench Preparation
   - Reasonable Floor Conditions

4. Providing all Suppliers' authorized representatives access at all reasonable times to the machine service and repair facilities.
5. Maintaining a logbook for each shift wherein the working hours, breakdown hours, maintenance hours, idle hours, etc. shall be recorded. This record will be available for examination and signature by the Supplier's representative.

C.7.3 Effect and Duration of Guarantee

C.7.3.1 This Guarantee shall become effective on the day on which the Equipment is commissioned at the Site. Commissioning shall be evidenced by the issue of the Purchaser's Acceptance Certificate.

C.7.3.2 This guarantee shall remain effective for the entire contract period from the date of commissioning irrespective of the hours operated by the Equipment during the period of the guarantee.

C.7.3.3 Compensation for not achieving Guaranteed Availability

In the event that Equipment fails to achieve the Availability herein provided, measured over each twelve (12) month period, the Supplier shall be liable for and pay to the Purchaser, as liquidated damages, a sum equal to as indicated hereunder for each equipment against the PBG/ extended SDBG / bills submitted by the Supplier as per clause-2 of SCC:

a. 1% of the delivered landed price of the equipment including the Spares Cost Cap for the year in which the machine could not achieve guaranteed availability for reduction in every percentage or part thereof from the Guaranteed Availability for the first 5%.

b. 10% of the delivered landed price of the equipment including the Spares Cost Cap for the year in which the machine could not achieve guaranteed availability for reduction beyond 5% from the guaranteed availability.

Note: i) Whenever deductions for unsatisfactory performance of equipment are made within the tenure of the PBG/extended SDBG/amount held back as PBG, the amount deducted, from the PBG/extended SDBG/amount held back as PBG, should be replenished within a month in order to ensure that the original value, of the PBG/extended SDBG/amount held back as PBG, remains the same.

C.8 Deemed Breakdown

When the supplier is unable to supply the replacement of a failed part during the contract period, and if the machine is commissioned by using the spares from the stock of the project, the period after 21 days till the supplier replaces the part shall be treated as 'deemed breakdown' (the credit for keeping machine available shall not be given to the supplier.)

The supplier shall not in any way be allowed to take out spare parts from other equipment, which are under breakdown and covered within the scope of this contract. However, CIL, in the interest of work, reserves the right to advise the supplier to commission the breakdown equipment covered under this contract by taking out spare parts from other breakdown

equipment. Nevertheless, during this period also, the equipment shall be treated as 'deemed breakdown' till the supplier replaces the spare parts.

C.9 Composite-warranty/guarantee

The supplier shall warrant that the equipment supplied under this contract is:

a) In accordance with the contract specifications.
b) The equipment shall have no defects arising out of design, material or workmanship & the complete equipment shall be warranted for 12 months from the date of commissioning. Any defect arising observed on this account will have to be attended immediately.
c) The supplier must ensure that there is no major breakdown due to manufacturing / design defects during the warranty period. In case such breakdown occurs, the purchaser reserves the right to extend the warranty period suitably.

The warranty shall cover for total equipment so that comprehensive responsibility lies only with the equipment supplier although components may be supplied by different suppliers to the equipment supplier.

C.10 Quality Assurance

C.10.1 The Supplier should furnish in detail its quality assurance plan for various stages of manufacture. The quality assurance plan shall be of the manufacturing plant where the Supplier proposes to manufacture the equipment. The Quality Assurance plan shall comply with an internationally recognized quality assurance standard such as ISO 9000:2015 or its equivalent.

C.10.2 The Supplier shall provide facilities to Purchaser or its authorized representatives for progress inspection during manufacture at its works and furnish all test data available in this regard for quality control, both for bought-out items and its own manufactured items.

C.10.3 The Purchaser or its authorized representative, when so required by him, shall also be provided with samples of "bought-out" materials for the purposes of undertaking independent tests, which independent tests shall be at the expense of the Purchaser.

Details are given in Annexure- (d)

PART D: EQUIPMENT SPECIFICATIONS

EQUIPMENT SPECIFICATION OF ELECTRIC HYDRAULIC FACE SHOVEL
[Rated Bucket Capacity: - 21 CuM, Make: Hitachi, Model: EX3600E-6]

D.1. Scope of Specification:

This specification is intended to cover the technical requirements for the design, manufacture, testing, delivery, on-site erection and commissioning of a self-propelled, crawler mounted electrically powered hydraulic face excavator with bucket capacity range 21 CuM.

D.2. References:

The following Indian/International Standards as per latest amendment are referred to in, and form part of, the Specification. The superseded or equivalent standards, if any, to any of the following IS/ISO standards if offered are to be supported by documentary evidence in form of copies of the equivalent standards certifying that offered standards are identical to the corresponding IS/ISO standards of NIT.

IS/ISO Ref.	Description
IS/ISO 2867	Earth-moving machinery - Access system.
IS/ISO 3457	Earth-moving machinery - Guards and shields - Definitions and specifications.
IS/ISO 6014	Earth-moving machinery - Determination of ground speed.
ISO 6015	Earth-moving machinery - Hydraulic excavators - Methods of measuring tool forces
IS/ISO 6405 : Part 1	Earth-moving machinery - Symbols for operator controls and other displays - Part 1 Common symbols.
IS/ISO 6405 : Part 2	Earth-moving machinery - Symbols for operator controls and other displays - Part 2 Specific symbols for machines, equipment and accessories.
IS 11252/ISO 6682	Earth-moving machinery - Zones of comfort and reach for control.
IS/ISO 6750 : Part 1	Earth-moving machinery - Operation and maintenance –Contents &Formats
ISO/TR 6750-2	Earth-moving machinery - Operation and maintenance –Operator's Manual-Part2: List of references
IS/ISO 7135	Earth-moving machinery - Hydraulic excavators - Terminology and commercial specifications
IS 12206/ ISO 7546	Earth-moving machinery – Loader and front loading excavator buckets Volumetric ratings.
IS/ISO 8643	Earth-moving machinery - Hydraulic excavator and back-hoe loader lowering control device - Requirements and tests.
IS/ISO 10265	Earth-moving machinery – Crawler machines – Performance requirements and test procedures for braking systems.
IS/ISO 10968	Earth-moving machinery – Operator's control.
IS/ISO 20474 Part 1	Earth –moving machinery-safety- Part1: General requirement.
IS/ISO 20474-5	Earth –moving machinery-safety-Part 5 : Requirements for hydraulic excavators.
Other IS/ISO standards mentioned in the specification of individual system of the equipment	

D.3. Design Criteria:

The excavator shall be capable of continuous digging for protracted periods on a system of 3 shifts each of 8 hours duration per day throughout the year in hard, highly abrasive, blasted sandstone/rock having average density after blasting of 1,800 kg/m^3.

The excavator shall be suitable for 2:1 heaped loading of Rear Dumpers of 200T payload class capacities.

D.3.1 Face Shovel Attachments

The excavator with Face Shovel attachment shall have the following working ranges:

a) Maximum cutting height – 16.56 mtr.
b) Maximum digging reach – 15.47 mtr.
c) Maximum digging depth – 4.16 mtr.
d) Maximum dumping height – 10.99 mtr.
e) Operating weight of the machine - 3, 53,000 kg.

The bucket digging force measured in accordance with ISO 6015 should not be less than 25,000 kg/m of bucket width.

D.4. Mechanical Specification:

D.4.1 Bucket:

The excavator shall be supplied with a hard faced, heavy-duty rock Face Shovel with rated bucket 21 CuM according to IS 12206/ISO 7546. The actual volumetric capacity of the bucket calculated as per IS 12206/ISO 7546 is 21CuM.

The specific weight of the steel used in construction of bucket shall be not less than 7800 kg/m3.

The tooth points and shanks (tooth adapters, if applicable) supplied with the bucket shall also be hard faced and should have proper, durable, easily removable and shock absorbing type attachment with the bucket.

D.4.2 Front End Equipment:

The boom and arm should be a rugged durable construction of high strength steel and free from any stress concentrations. The design must take care of all forces i.e. bending, torsion, compression, etc. encountered during operation of the equipment. Sealed bearings / bushings should be provided at pivot points.

The bucket attachment connecting pins shall be sealed and lubricated.

D.4.3 Hydraulic Drive System:

The excavator hydraulic system should be of proven design for efficient operations. The main hydraulic pumps shall be variable displacement type, hydraulic motors and cylinders should be field proven large heavy duty type and have suitable in-built protection from surge, cavitation, loss of oil due to hose leakage or burst, etc. As far as practicable reputable single make pumps, motors, cylinders and valves, etc. shall be used in the machine.

Adequate filtration of hydraulic oil shall be provided. The hydraulic tank shall be pressurized. An adequate and effective hydraulic oil cooling system shall also be provided. A transfer pump along with filtration unit as per design of the manufacturer shall be provided for filling of hydraulic oil in the tank.

Heat resistant/heat retardant hoses shall be fitted in heat zones. All hoses shall be grouped as far as possible and suitably clipped to reduce damage from scuffing and external damage.

Hydraulic cylinder movement limiting provision/stopper and a boom lowering control system which complies with IS/ISO 8643 shall be provided.

Tata Hitachi Construction Machinery Co. Pvt. Ltd.

D.4.4 Swing System:

An independent hydraulic system should be provided for the swing motion.

Heavy duty Swing Circle with internal swing gear and pinion immersed in lubricant bath & dirt seals shall be provided.

An upper structure swing lock/suitable arrangement to lock the upper structure shall be provided.

D.4.5 Propel and Steering:

Independent crawler drive with independent fail-safe braking system and hydraulically operated emergency and parking brakes which comply with IS/ISO 10265 shall be provided.

D.4.6 Undercarriage:

The undercarriage shall be heavy duty and of sufficient strength to withstand the high loads, which may occur due to uneven, ground conditions. It shall be of welded construction and stress relieved as required.

The sprocket should be a single piece / segmented type. Lifetime lubricated, idler and rollers, and a reliable track tensioning arrangement should be provided.

Crawler shoes shall be heavy duty and designed for ease of replacement whenever necessary. The weight of the undercarriage should preferably be 30 to 45% of the operating weight of the machine.

D.4.7 Machinery House:

The excavator shall be provided with a machinery house made of steel sheeting supported by a steel structure and shall cover the Prime Mover & Drive System. It shall be designed to give ready and safe access to personnel & equipment for maintenance.

Non-slip type walkways and catwalks with handrails shall be provided in and around the machinery house, the operator's cab and service platforms and shall comply with IS/ISO 2867.

D.4.8 Lubrication System:

A Lincoln, Japan make centralized PLC based electrically/hydraulically operated, double / single line (as per manufacturer system design) automatic lubrication system shall be provided to service all lubrication points on the machine including high viscosity lubrication points.

The lubrication system shall be fully monitored to ensure adequate lubricant flow is maintained to all points. The monitoring system shall, wherever possible, be interlocked with the relevant control circuits to prevent damage due to lack of lubrication at any point. Alarms and/ or indications for the failure of lubrication system shall be repeated on the instrument/ test panel. Flow of grease and pressure of the lubrication system shall be fully monitored through pressure switches to ensure that adequate lubricant flow is maintained to all major parts.

Lubricant containers of adequate size shall be located in a separate room / enclosure inside the machinery house / convenient location. Sufficient numbers of suitable capacity lubricating pumps shall be provided. The containers shall be fitted with suitable arrangement for cleaning and refilling or replacement with fresh new barrels.

All lubrication lines and injectors shall be protected from damage. Location of all injectors shall be such that these can be conveniently inspected and repaired. The lubrication lines to the boom point should be properly guided. Flexible lines shall only be used where there is relative movement between parts and for final connection to movable components. Steel piping shall be used for long runs and shall terminate in steel junction blocks to prevent disturbance to steel piping when flexible hoses are replaced.

Lubricants recommended shall be of reputed make with Indian equivalent.

Details given in Annexure - (e)

D.4.9 Operator's Cab:

A fully insulated, high-visibility, rigidly mounted, sound-suppressed, vibration-suppressed, FOPS operator's cab with standard air conditioning system containing environmentally safe refrigerant, tinted safety glass should be so positioned to facilitate a clear and unrestricted view of the travel & work areas of the machine

necessary for its intended use. The performance criteria shall be in accordance with IS/ISO 5006. The sound level inside the cab shall be below 85 DBA while the equipment is operating, and with the door closed.

All operating controls, all monitoring, working signals and emergency power isolation switch to trip the field switch should be conveniently located in consoles within easy reach of the operator and shall comply with IS/ISO 6405 Part-1, IS/ISO 6405 Part-2, IS 11252/ISO 6682 & IS/ISO 10968. The operator's cab shall be provided with an emergency exit gate in addition to primary access path to the cabin.

The operator's seat shall be ergonomically designed suspension type, which can be adjusted for operator's height and weight. The seat shall provide vertical and fore / aft adjustment / adjustable joysticks to allow custom fitting of the joysticks to individual operators for ease of operation. Seatbelt for operator with reminder shall be provided. The console shall have features an expandable media mounting post to which the Graphic User Interface (GUI) is mounted. The GUI shall have menus and information screens that allow the operator to display necessary basic information and perform various operation functions. Side / rear vision cameras / combination of rear and side vision camera shall be provided in the machine with remote display in operator's cab. The camera system shall also cover all the blind spots.

The air conditioner shall be heavy duty off-the-road equipment application type. The climate control ducting in the cab shall be located above and/ or below the operator. There should be controls to allow regulation of air flow and auto - defrosting arrangement. A cooling fan and a suitable operator's cab heater shall also be provided.

Horn / Alarm shall be provided on outer side of revolving frame, which shall be operated from operator's cab.

There should be a two-way communication system (preferably a wired communication system) other than mobile between operator's cab and the machinery house.

D.4.10 Gauges and Indicators/Electronic Display:

The following shall be provided in Operator's Cabin:

a) Voltmeter
b) Ampere meter
c) Hour-meter
d) Hydraulic Oil Level Indicator
e) Hydraulic Oil Temperature Gauge
f) Motor Overload Indicator
g) Phase Failure Indicator
h) Phase sequence relay
i) Pilot Tripping
j) Motor's Power on/off

D.4.11 Warning Alarms:

Warning alarm shall be provided for the following in Operator's Cabin:

a. Hydraulic oil level
b. Hydraulic oil temperature
c. Microcomputer (if applicable)
d. Automatic lubrication
e. Trip Alarm for Main Motor
f. Hydraulic Oil Filter Clogging Indicator

D.4.12 Guards and Shields:

Adequate guards and shields which comply with IS/ISO 3457 shall be provided throughout the excavator.

D.4.13 Automatic Fire Detection & Suppression System:

An automatic fire detection and suppression system manufactured in India by Associate Engineers/Ansul/Southern Electronics, shall be provided on the equipment complying DGMS (Tech) Circular No. 06 of 2020 dated 27.02.2020.

- Automatic fire detection and suppression system suitable for fire class A, B & C inside machinery house & below Deck of shovel.
- Supplier have submitted a schematic drawing indicating Plan of the system with relative position of items to be protected from fire.
- Fire detection and suppression of fire may be either total gas flooding or dry chemical powder base spray through nozzle strategically through an actuation cartridge, located to the targets, or combination of the two.
- Fire suppression agent used in neighborhood of electrical appliances shall be clean and shall not damage electrical / electronic component.
- Fire suppression system shall be non-hazardous & safe for human and environment friendly. It should have quick cleanup and environmental sustainability.
- The sensor shall send the signal to the control unit integrated with a LED and/or alarm indicator to show the status of the detector.
- The system shall operate only in active fire area to supply adequate quantity of fire suppressing agent for effective fire-fighting and to avoid re-ignition and suitably designed to extinguish the fire as per class of fire (A, B & C) of that location.
- The system shall be actuated automatically by detection of fire and control unit to be installed within the Operator's cabin for automatic system operation.
- The system shall also have provision of actuating manually.
- The system shall provide facility for self-checking /testing/inspection without operating.
- The data regarding health & event shall be logged in the system with date & time, which can be downloaded to PC/ Laptop in latter stage with memory capacity to store data of at least 15days.
- The system should be capable for efficient operation in the extreme mining conditions with dust, dirt, water & vibrations.

The high pressure storage vessels and hoses, if used with fire-fighting and fire suppression systems, shall conform to the requirements stipulated in the relevant Indian standards.

The Supplier submitted a Certificate as an undertaking that, a valid Test Certificate (valid as on the date of commissioning of the equipment at site) shall be submitted at the time of supply of equipment along with other documents, for AFDSS including materials and chemicals used in fire suppression system from any Government or Government approved Laboratory in compliance with relevant Indian Standards as per DGMS (Approval) Circular No. 02 dated 08th July 2013 with subsequent amendments..

Periodical refilling is to be done by the supplier.

Detail given in Annexure - (f)

D.4.14 Fire Extinguishers:

An adequate number of fire extinguishers, manufactured in India by Minimax/ Associate Engineers/Ansul/Southern Electronics/ Cease fire shall be provided at strategic points on the shovel, suitably mounted in heavy-duty brackets for ease of removal.

The extinguishers shall be both dry chemical powder (DCP type) and CO_2 type with a minimum capacity of 5 kg and shall comply with Indian Standard IS: 15683 with latest amendment.

The Supplier submitted a Certificate as an undertaking that, a valid Test Certificate (valid as on the date of commissioning of the equipment at site) shall be submitted at the time of supply of equipment along with other documents, for Fire Extinguishers including Materials and Chemicals used in fire suppression system from any Government or Government approved Laboratory in compliance with relevant Indian Standards as per DGMS Circular No. DGMS (Approval) Circular No. 02 dated 08th July 2013 with subsequent amendments.

Periodical refilling is to be done by the supplier.

Detail given in Annexure - (g)

D.5. Electrical Specification:

D.5.1 Power Supply:

The electrical power supply to the machine will be 6.6 kV (± 10%), 50 Hz (±3%), 3 phases (earthed neutral). This will be provided via a trailing cable from the mine electrical distribution network.

All high-tension electrical equipment shall have suitable insulation rating not less than 12 kV to protect against a rise in potential across any one phase of the supply.

An isolator switch shall be provided in the machine for disconnecting the main incoming supply line.

A high voltage distribution switchboard shall be provided to supply the various machine drive, control and auxiliary sub-circuits. Each switch forming part of the switchboard shall comprise an on-load isolator; an electrically closed and tripped, vacuum circuit breaker / vacuum contactor and fitted with protection against overload, short circuit and earth fault; and appropriate control push buttons, indicators and alarms. Indication of the state of the switch and any fault condition shall be provided on the front of the switch panel.

D.5.2 Prime Mover:

The hydraulic power system shall be driven by squirrel cage electric motor of rated continuous output 1200kW. The motor shall be suitable for outdoor operation, self-cooled, continuous rated and dust proof with suitable ingress protection (IP) for the intended use. The Insulation class should be Class-F or above with Class-B temperature rise.

The electrical drive systems must be so designed that all the functions of the equipment have optimum output with high mechanical efficiency, low maintenance cost and improved maintainability and component life.

The electric motor shall be controlled from a suitably rated vacuum starter control panel providing overload, short circuit, single phase, earth fault, earth leakage and over & under voltage protection. Fault and circuit status indications shall be provided on the starter control panel.

The motor shall be capable of being remotely started from a control/instrument panel located in the machinery house / operators cab. A remote stop facility shall be provided in the operator's cab.

The control circuits for each drive shall be housed in a steel cabinet provided with internal illumination. The cabinets shall be dust and vermin proof.

Anti-condensation heaters shall be fitted to all major drives and electrical cabinets wherever applicable.

All control circuits shall operate at 24V DC or 110/ 220 V AC, single-phase 50Hz. with earthed neutral. The electrical supply for other items shall be 24V DC or 440 / 415V, 3 phase, 50Hz or 220 / 110Volts, 50Hz, single phase with earthed neutral as appropriate.

Control circuit transformers shall be protected on their primary side by isolation switches and fuses.

Control circuits shall be protected on one side of the transformer by a fuse with the opposite side connected to earth.

All cables used in the machine shall be of the fire resistant type.

D. 5.3 Trailing Cable:

The shovel shall be provided with 300 meters of 6.6 kV, 6 core, Apar Industries Limited, India make trailing cable of adequate cross section in relation to the rating of machine and the 50 degree C ambient temperature and supply should be as per Indian Electricity rule clause 123, sub-clause 1 & 6. The cable shall be of the flexible type suitable for use with open pit mining machinery.

The cable shall have 3 power cores of equal adequate cross section individually screened with metallic ATC (Annealed tinned copper) wire or specially designed formulated semi-conducting compound, 2 earth cores of equal cross section of minimum size of 50% of size of power core and one pilot core. The cable should have minimum insulation level of 12 kV.

The shovel shall be provided with a weatherproof box termination for trailing cable.

D.5.4 Power Factor Correction and Harmonic Suppression:

The electrical circuit shall include suitable arrangements for power factor correction to ensure that the average power factor over the whole cycle is above 0.9 lag.

The electrical circuits shall have adequately designed harmonics suppression networks or control schemes for reducing harmonics and transients to acceptable levels as per IEEE Standard 519.

D.5.5 Field Switch:

The shovel should be provided with a skid-mounted field switch manufactured in India by Mine Line Pvt. Ltd. / Electroteknica Engineering Pvt. Ltd. The switch shall be of robust construction suitable for the rugged terrain and the mining conditions for which it will be used. It shall also be dust and vermin proof and protected to withstand torrential monsoon rains. Proper illumination shall be provided within the enclosure.

The switchgear should be of vacuum circuit breaker type with symmetrical rupturing capacity of 150 MVA at 6.6 kV. The field switch shall also have earth fault, overload, short circuit, over voltage, under voltage, single phase, earth leakage and reverse phase sequence protection relays. In an emergency, it should be possible to trip the field switch from operator's cabin by a push button switch and through inbuilt remote sensor. Provision to trip VCB mechanically and electrically shall also be provided.

Suitable arrangement shall be provided to suppress the damaging over voltage due to switching transients and lighting peaks.

Suitable facilities shall be provided for the termination of supply cables by plug & socket type cable coupler arrangement. Earth connection stud shall be provided on each terminal box and on the main body of the switch casing. It shall be possible to feed through the switch to other similar units. Blank plates and adapters shall be provided to safely seal the feed- through termination against the elements when not in use.

The HV junction Box shall be interlocked with tripping circuit of field switch and HT Isolator panel shall be mounted / placed in such a way that it should be easily accessible for the purpose of maintenance, repair and operation in compliance with Indian Electricity Rules and DGMS circulars.

D.5.6 Lighting:

Adequate LED flood lighting and illumination at strategic points both outside and inside of the shovel shall be provided for visual observation and night shift operation. The lighting fixtures shall be supplied at 220/110 V fed from main / auxiliary transformer (star point grounded) or 24V D.C. Earth leakage protection is to be provided with lighting circuit breaker.

D.5.7 Transformers:

All transformers shall be suitably rated for the duty specified and the operating environment. The transformers shall be delta-star/star-star (subject to compliance of IE rule and DGMS safety norms) connected with star points earthed for earth fault protection.

D.5.8 Safety Features:

All safety features & devices as per Govt. Of India Gazette notification no. Z 20045/01/2018/S&T (HQ) dated 01.10.2018, DGMS (Tech) Circular No. 06 of 2020 dated 27.02.2020 and subsequent amendments, if any, including following shall be provided in the equipment. Supplier shall submit a Certificate as an undertaking in this regard that all safety features and devices are incorporated in the equipment.

a. All function cut off switch.
b. Swing Motor Brake.
c. Fire resistant / fire retarder hydraulic hoses in place of ordinary hoses to reduce the chances of fire. All the sleeves and conduits in which cable/wire are laid shall be of fire resistant type.
d. Seat Belt with seat belt reminder.
e. Vent valve, if applicable on top of hydraulic tank should be able to be removed without any tool.
f. A baffle plate between cold zone and hot zone (if applicable)
g. Provision for limiting of hydraulic cylinder-Stopper
h. Operator Fatigue Monitoring System

Detail given in Annexure (h)

Tata Hitachi Construction Machinery Co. Pvt. Ltd.

D.6. Ancillary Equipment and Other Requirements:

The following are to be provided with the excavator:

a) Hydraulic jack 100 T – 2 nos.
b) Hydraulic pressure gauge
c) One set Pneumatic Tool of one inch drive of reputed make.
d) Adequate 440V/415V (+/- 10%) three phases 50 Hz (+/- 3%) welding power outlet suitably located so that welding can be carried out any point on the excavator.
e) Adequate 24V DC or 220V/110V single phase, hand held inspection outlets, portable hand lamps and all necessary supporting equipment.
f) A 220V/110V single phase, portable electric blower with suction attachment of reputed make.
g) The machine should be equipped with Data Logging Units for capture of key performance parameters of prime mover, hydraulic system and lubrication system for better reliability
h) The equipment should be supplied along with first fill of all Oils, Grease and Lubricants required for successful commissioning of the equipment.

D.7.Productivity & Health monitoring system:

The equipment shall be provided with suitable licensed, on-line, real time, monitoring interface facility, compatible for GPS/GPRS-based transfer of equipment performance data (commonly known as PMS and HMS) to third party equipment management system.

The system shall have measuring points and self-data capturing facility for followings –

a) Working hour, idle hour, based on the duration of a shift for which the equipment is switched on for operation.
b) Cumulative qty. of material handled (both in terms of Cu. M. & No. of buckets)
c) Average cycle time for each day
d) Average swing angle per day
e) Incoming voltage, current, power consumption, frequency and power factor.
f) Hydraulic oil pressure, temperature, viscosity and water content
g) All drive motors / transformer vital parameters
h) Preventive maintenance parameters
i) Predictive health monitoring parameters.
j) Additional parameters as per requirement of equipment manufacturer / user

The above point no. b, c and d is not mandatary.

This system shall have suitable memory capacity to store all captured vital parameter data in 6 hours or less interval batch form and all real time exception / error data for at least 30 days period and shall have suitable port to download these data to a laptop / data storage system.

The supplier shall provide the following:

1. There has to be one integrated single online port for capturing all the vital data.
2. The real time interface telemetry port will be provided in the equipment.
3. All the data shall be available in the individual form through single port and its communication protocol must be as per global standards.
4. There shall be no additional requirement of any data converter for data capturing like Analog to Digital and vice-versa etc.
5. There shall be integrated on board data management system as explained at point no.3 as above.
6. Permission to third party for interfacing, data collection through online port.
7. Signing of Non-disclosure agreement to protect intellectual property right on either side.
8. To provide full technical support to third party vendor for interpretation and defining parameters for individual alarm to monitor equipment vital data.
9. The HEMM equipment supplier should provide access to data as required by end user without any financial implication to third party.

This interface facility shall be made available till the working life of equipment. However, the supplier shall provide this interface facility during the contract period as a part of contract cost.

Construction Machinery Co. Pvt. Ltd.

To ensure the satisfactory operation of above system, a tripartite agreement shall be signed by the user, supplier and the service provider of OITDS / System Integrator, if any.

Details given in Annexure - (i)

D.8. Performance Guarantee:

In accordance with the provisions of clause C 6.2.6 of the technical specifications, the expected working hours per annum are 5000 (five thousand) hours. The expected working hours per annum as indicated are only approximate hours and may vary +/- 500 hours.

In case, actual working hours of the equipment exceeds 44,000[{(5500 x 8) = 44,000] hours during the tenure of 8 years (96 months) of contract period, then consumables items as per requirement shall be arranged by the Purchaser.
In accordance with the provisions of clauses C 7.2.2 and C 7.3.2 of the technical specifications, the supplier shall guarantee that the availability of each equipment shall not be less than 85% (eighty-five percent) annually for a period of 1st year to 4th year of operation and 84% (eighty-four percent) annually for a period of 5th year to 8th year of operation from date of commissioning.

During contract period of 8 Years (96 Months), a period of 07 (Seven) days per year shall be allowed to equipment supplier in consultation with project Excavation head, from 5th year to 8th year for each machine for planned maintenance of equipment. This down time [maximum period of 07 (Seven) days] arising due to such maintenance of the equipment shall be treated as out of schedule for annual availability calculation in the relevant year. This period of 07 (Seven) days shall be provided once only in each applicable year and not in a staggered or partial manner. In case of any spillover of maintenance job(s) beyond such 07 (Seven) days period shall be treated as breakdown hours.

D.9. Expected life of major assemblies:

Detail given in Annexure – (j)

D.10. Information provided by the Supplier:

The Supplier have furnished the following information. All technical information are in SI units.

D.10.1 General:

a) Detail list of special tools, which shall be provided with the equipment for maintenance, erection & commissioning of the equipment. The firm shall give an undertaking that the listed tools shall be sufficient for the purpose. If any additional tool is required, that shall be provided as per requirement.
Detail given in Annexure – (a)

b) **Details of erection programmes given in Annexure – (k)**

D.10.2 Technical Details:

a) Volumetric rating of the bucket according to IS 12206/ISO 7546 together with verification calculations and drawings (refer clause 4.1). **Detail given in Annexure – (l)**
b) Maximum bucket and arm cylinder digging forces measured according to ISO 6015.
Detail given in Annexure – (m)
c) Schematic drawing of the machine showing the position of the Center of Gravity and it's distance from the Central Axis of Rotation under the following operating conditions:
   i. Bucket at maximum digging force position with crawler tracks perpendicular to the face of the cut.
   ii. Bucket at maximum digging force position with crawler tracks parallel to the face of the cut.
   Detail given in Annexure – (n)
d) Details of electric drive control systems, including circuit diagrams, motor details and transformer specifications. **Detail given in Annexure – (o)**
e) Calculation for determining the time for operating cycle.

i. Load the bucket to rated capacity over the maximum working range, swing through an angle of 90 degree, dump and return to dig.
ii. Hourly power consumption for the above operating cycle.
Detail given in Annexure – (p)

f) Detailed technical descriptions of each system of the Excavator.
Detail given in Annexure – (q)

g) Layout drawings and detailed description of all hydraulic systems and components.
Detail given in Annexure – (r)

h) Comprehensive commercial literature indicating therein complete technical specifications, the content of which must comply with IS/ISO 7135. **Detail given in Annexure – (s)**

i) Schematic and layout drawings, details of the supplier, number, function and type of Automatic Centralized Lubrication System. **Details given in Annexure - (e)**

j) Schematic and layout drawings and details of the Supplier, number, function and type of Automatic fire detection and suppression System. **Detail given in Annexure - (f)**

k) Details of major bought-out assemblies and sub-assemblies indicating make, type, manufacturer's complete address etc. **Detail are given in Annexure – (b)**

l) Operation and Maintenance Manuals in accordance with IS/ISO 6750 Part-1 and ISO 6750 Part-2, with copies in CDs as stipulated in clause A.3. **Annexure – (t)**

D.10.3 Dimensions, Weights and Performance Details:

D.10.3.1 Working Ranges:

a)	Maximum digging height (m)	16.56 m
b)	Maximum digging reach (m)	15.47 m
c)	Maximum digging depth (m)	4.16 m
d)	Minimum dumping height (m)	10.99 m
e)	Reach at maximum digging force (ım)	13.90 m

D.10.3.2 Dimensions:

10.3.2.1 Basic machine:

a)	Upper structure overall width (m)	9.42 m
b)	Upper structure overall width, with catwalks (m)	9.42 m
c)	Upper structure rear end swing radius (m)	6.78 m
d)	Height to top of FOPS (m)	7.83 m
e)	Clearance under upper structure (m)	2.44 m
f)	Undercarriage overall width (m)	6.77 m
g)	Crawler overall length (m)	8.70 m
h)	Crawler tracks height (m)	2.315 m

D.10.3.2.2 Front End Attachment:

a)	Bucket width (m)	3.77 m
b)	Boom length with specified bucket (m)	7.94 m
c)	Arm length with specified bucket (m)	5.11 m

D.10.3.3 Weights:

a)	Shipping weight of all separate components (kg)	**Detail in Annexure – (u)**
b)	Bucket total weight (kg)	28300 kg
c)	Bucket specific weight (kg/cum)	7800 kg/cum
d)	Weight of undercarriage (kg)	94600 kg
e)	Total working / operating weight (kg)	353000 kg

D.10.3.4 Performance details:

a)	Swing speed (r / min)	2.9 r/min
b)	Travel speed (m/sec)	High : 0 to 2.1 km/h Low: 0 to 1.6 km/h
c)	Gradeability (%)	60% (31°) maximum

Hitachi Construction Machinery Co. Pvt. Ltd.

D.10.3.5 Hydraulic System:

a) **Make, Model, number, flow rates and operating pressures of pumps**
Main Pump (MP 1 to 8)
Make: Kawasaki Heavy Industries Ltd.
Model: K3V280DTH150R
Number: 8 variable displacement, axial piston pumps.
Max. Flow: 514 L/min (136 US gpm) x 2
Operating Pressure: 29.4 +/- 1.0 Mpa (300 +/- kgf/cm3)

b) **Make, Model, number and ratings of motors**
Make: Hitachi
Model: TFOA-KK
Number: 1
Rated continuous output: 1200 kW
Voltage: AC6600 V / 50 Hz

c) **Make, Model, number, piston diameters and stroke lengths of cylinders**
Make: Kayaba Industries Ltd.
Model: Boom: B6355-60603
Arm: B6355-60703
Bucket (R): B6355-76103
Bucket (R): B6355-76203
Dump: B6355-32903
Level: B6355-60803

Description	Qty	Bore (mm)	Rod Dia. (mm)	Stroke Length (mm)
Boom	2	360	260	2555
Arm	1	300	220	2335
Bucket	2	280	200	2285
Dump	2	225	130	595
Level	1	360	260	930

d) **Relief valve operating pressures (kPa)**
Implement circuit: 29.4 MPa (300 kgf/cm2)
Swing circuit: 29.4 MPa (300 kgf/cm2)
Travel circuit: 29.4 MPa (300 kgf/cm2)
Pilot circuit: 3.9 MPa (40 kgf/cm2)

D.10.3.6 Undercarriage:

a)	Crawler width (m)	6.77 m
b)	Crawler shoes width and total number	Crawler shoes width: 1270 mm Track shoes (each side): 38 Nos.
c)	Centre to centre of idler roller and sprocket (m)	6.66 m
d)	Ground contact area (sq.m)	1.87 m
e)	Ground bearing pressure (kPa)	185 kpa
f)	Load rollers, diameter and number per crawler	Lower rollers : 8 Nos (each side) Diameter: 0.49 m
g)	Driving sprocket diameter (m)	1.542 m
h)	Idler roller diameter (m)	1.526 m

Tata Hitachi Construction Machinery Co. Pvt. Ltd.

Equipment Acceptance

The Equipment ordered will be finally accepted subject to the Supplier demonstrating to the Purchaser or its authorised representative (may be third party) that the equipment, or assembly or sub-assembly (selected at random by the Purchaser) when tested, meets the Performance Data provided by the Supplier in accordance with the requirements of clause D.10. In case if testing facility for a particular parameter is not available at site, the Equipment ordered will finally be accepted subject to submission of Manufacturer's certified test copy for that parameter of performance data provided by the supplier in accordance with the requirements of clause D.10. A detrimental deviation of up to 2½% will be accepted.

1	Cycle Time at 90 deg. swing	To be tested at site after commissioning, under operating conditions as stated in the Contract. The equipment may be operated, at the Supplier's discretion, either by the Supplier's personnel (who are to be deployed for training as per contract) or by the Purchaser's personnel who are to be authorised by the Supplier.
2	Hourly Power Consumption	To be tested at site after 30 (thirty) operating days' average immediately after commissioning under operating conditions as stated in the Contract. The equipment may be operated, at the Supplier's discretion, either by the Supplier's personnel (who are to be deployed for training as per contract) or by the Purchaser's personnel who are to be authorised by the Supplier.
3	Digging Forces	Manufacturer's test certificate to be furnished

Tata Hitachi Construction Machinery Co. Pvt. Ltd.

Price Schedule

Tata Hitachi Construction Machinery Co. Pvt. Ltd.

Price Schedule

A. Equipment Price:

Sl. No.	Description	Currency	Value
1	FOB Price (per equipment) inclusive of Agency Commission (Indian Agency is NIL.)	JPY	47,00,75,572.00
2	Marine Freight Charges upto Port of Entry in India*	JPY	4,00,17,291.00
3	Marine Insurance Charges *	JPY	3,20,028.00
4	CIF Price at Port of Entry in India	JPY	51,04,12,891.00
5	Assessable Value	JPY	51,04,12,891.00
6	Basic Customs Duty (BCD) on Assessable CIF Value	JPY	0.00
7	Social Welfare Surcharge (SWS) on BCD	JPY	0.00
8	IGST @ 18 %	JPY	9,18,74,320.38
9	GST @ 5 %on marine freight	JPY	20,00,864.55
10	GST @ 18 % on Indian Agency Commission	JPY	0.00
11	Total CIF Value incl. GST on (Marine Freight + Ind. Agency Commission) (Exchange Rate JPY 1 = Rs 0. 5234)	Rs.	26,81,97,359.65
12	Total Customs Duty	JPY	9,18,74,320.38
13	Total Customs Duty (Exchange Rate JPY 1 = Rs 0.5234)	Rs.	4,80,87,019.29
14	Port charges, clearing forwarding charges and other incidental charges	Rs.	12,10,000.00
15	GST @ 18 % on Port charges, clearing forwarding charges and other incidental charges.	Rs.	2,17,800.00
16	Inland Transportation & Insurance for delivery upto Final Place of Destination*	Rs.	42,00,000.00
17	GST @ 18 % on Inland Transportation & Insurance for delivery upto Final Place of Destination	Rs.	7,56,000.00
18	Erection & Commissioning Charges	Rs.	16,00,000.00
19	GST @ 18 % on Erection & Commissioning	Rs.	2,88,000.00
20	Total Price of all Items sourced in INR required for fitting in the equipment during commissioning of the equipment	Rs.	60,00,000.00
21	Total GST applicable on all Items sourced in INR required for fitting in the equipment during commissioning of the equipment	Rs.	10,80,000.00
22	CIP Price per Equipment without GST	Rs.	28,01,60,107.15

23	GST	Rs.	5,14,76,071.79
24	CIP Price per Equipment with GST (Landed Price)	Rs.	33,16,36,178.94
25	Total Quantity of Equipment (Nos.)		02
26	CIP Price of Total Quantity of Equipment without GST	Rs.	56,03,20,214.30
27	Total GST	Rs.	10,29,52,143.58
28	**CIP Price of Total Quantity of Equipment with GST**	Rs.	66,32,72,357.88

B. Prices for Consumable Spares and Consumables for 12 months of warranty period from the date of commissioning of the equipment and thereafter Spares and Consumables for a period of 7 years under Spares Cost Cap:

Sl No.	Description	Value per Equipment in INR	Extended Value for 2 nos. Equipment in INR
Warranty Consumable Spares & Consumables (quoted in INR)			
1	Total FOR Destination Price for Consumable Spares & Consumables	2,83,09,022.00	5,66,18,044.00
2	Total GST for Consumable Spares & Consumables	50,95,623.96	1,01,91,247.92
3	Total Landed Price for Consumable Spares & Consumables with GST	3,34,04,645.96	6,68,09,291.92
2nd year Spares & Consumables (quoted in INR)			
1	Total FOR Destination Price	4,26,99,401.00	8,53,98,802.00
2	Total GST	76,85,892.00	1,53,71,784.00
3	Total Landed Price with GST	5,03,85,293.00	10,07,70,586.00
3rd year Spares & Consumables (quoted in INR)			
1	Total FOR Destination Price	7,45,50,330.00	14,91,00,660.00
2	Total GST	1,34,19,059.00	2,68,38,118.00
3	Total Landed Price with GST	8,79,69,389.00	17,59,38,778.00
4th year Spares & Consumables (quoted in INR)			
1	Total FOR Destination Price	11,62,68,642.00	23,25,37,284.00
2	Total GST	2,09,28,356.00	4,18,56,712.00
3	Total Landed Price with GST	13,71,96,998.00	27,43,93,996.00
5th year Spares & Consumables (quoted in INR)			
1	Total FOR Destination Price	10,81,69,001.00	21,63,38,002.00
2	Total GST	1,94,70,420.00	3,89,40,840.00

Tata Hitachi Construction Machinery Co. Pvt. Ltd.

3	Total Landed Price with GST	12,76,39,421.00	25,52,78,842.00
6th year Spares & Consumables (quoted in INR)			
1	Total FOR Destination Price	9,24,35,084.00	18,48,70,168.00
2	Total GST	1,66,38,315.00	3,32,76,630.00
3	Total Landed Price with GST	10,90,73,399.00	21,81,46,798.00
7th year Spares & Consumables (quoted in INR)			
1	Total FOR Destination Price	14,10,10,035.00	28,20,20,070.00
2	Total GST	2,53,81,806.00	5,07,63,612.00
3	Total Landed Price with GST	16,63,91,841.00	33,27,83,682.00
8th year Spares & Consumables (quoted in INR)			
1	Total FOR Destination Price	8,12,41,442.00	16,24,82,884.00
2	Total GST	1,46,23,460.00	2,92,46,920.00
3	Total Landed Price with GST	9,58,64,902.00	19,17,29,804.00
Total Basic Price for warranty spares and Consumable Spares and Consumables for 84 months with GST		68,46,82,957.00	136,93,65,914.00
GST on warranty spares and Consumable Spares and Consumables for 84 months with GST		12,32,42,931.96	24,64,85,863.92
Total Landed Price for warranty spares and Consumable Spares and Consumables for 84 months with GST		80,79,25,888.96	161,58,51,777.92

C. Total Value of Equipment and Spares & Consumables for 8 years:

Description	Value per Equipment in INR	Extended Value for 2 nos. Equipment in INR
Total Price for Equipment, Consumable Spares and Consumables for warranty period and spares and Consumables for 84 months without GST	96,48,43,064.15	192,96,86,128.30
Total GST on Equipment, Consumable Spares and Consumables for warranty period and spares and Consumables for 84 months	17,47,19,003.75	34,94,38,007.50
Total Landed Price for Equipment, Consumable Spares and Consumables for warranty period and spares and Consumables for 84 months with GST	113,95,62,067.90	227,91,24,135.80

NB: * - Shall be payable at actuals subject to the maximum rate/ amount mentioned above.

For Consumables Spares & Consumables for first 12 months of warranty period from the date of commissioning of Equipment quoted in INR													
				Unit Values (in Rs.)									
Sl. No.	Item Description with part no.(if any)		Unit of Measurement	FOR Destination Price after PJ	GST		Landed Price	Input Tax Credit Amount	Net Landed Price after	Quantity of Consumables	Total FOR Destination Price	Total GST Amount per equipment	Total Landed Price for Consumables Spares &
					Rate	Amount							
1	2		3	4	5	6=4*5	7=4+6	8=6	9=7-8	10	11 = 4*10	12=6*10	13=7*10
	Consumables Spares												
	Description	Part No.											
1	POINT;TOOTH	CE07002	Nos	94,078.00	18%	16,934.04	111,012.04	16,934.04	94,078.00	90	8,467,020.00	1,524,063.60	9,991,083.60
2	PIN	4601677	Nos	100,137.00	18%	18,024.66	118,161.66	18,024.66	100,137.00	5	500,685.00	90,123.30	590,808.30
3	PIN;LOCK	4394517	Nos	4,977.00	18%	895.86	5,872.86	895.86	4,977.00	90	447,930.00	80,627.40	528,557.40
4	RUBBER;LOCK	4394518	Nos	2,289.00	18%	412.02	2,701.02	412.02	2,289.00	90	206,010.00	37,081.80	243,091.80
5	ADAPTER	4601676	Nos	243,278.00	18%	43,790.04	287,068.04	43,790.04	243,278.00	5	1,216,390.00	218,950.20	1,435,340.20
6	SHROUD	CE07003	Nos	606,261.00	18%	109,126.98	715,387.98	109,126.98	606,261.00	6	3,637,566.00	654,761.88	4,292,327.88
7	SHROUD	CE07004	Nos	677,192.00	18%	121,894.56	799,086.56	121,894.56	677,192.00	6	4,063,152.00	731,367.36	4,794,519.36
8	SHROUD	CE07005	Nos	279,906.00	18%	50,383.08	330,289.08	50,383.08	279,906.00	6	1,679,436.00	302,298.48	1,981,734.48
	Consumables												
	Description	Full Specification											
1	ELEMENT; FILTER	4333469	Nos	11,248.00	18%	2,024.64	13,272.64	2,024.64	11,248.00	66	742,368.00	133,626.24	875,994.24
2	RUBBER	4250293	Nos	2,523.00	18%	454.14	2,977.14	454.14	2,523.00	66	166,518.00	29,973.24	196,491.24
3	O-RING	A810220	Nos	1,310.00	18%	235.80	1,545.80	235.80	1,310.00	77	100,870.00	18,156.60	119,026.60
4	ELEMENT, FILTER	4185299	Nos	8,296.00	18%	1,493.28	9,789.28	1,493.28	8,296.00	11	91,256.00	16,426.08	107,682.08
5	ELEMENT FILTER	4252563	Nos	4,954.00	18%	891.72	5,845.72	891.72	4,954.00	22	108,988.00	19,617.84	128,605.84
6	ELEMENT, FILTER	3501404	Nos	3,852.00	18%	693.36	4,545.36	693.36	3,852.00	11	42,372.00	7,626.96	49,998.96
7	FILTER	4S01130	Nos	13,572.00	18%	2,442.96	16,014.96	2,442.96	13,572.00	12	162,864.00	29,315.52	192,179.52
8	TATA HITACHI EP2 HEAVY DUTY GREASE-	TS00001	Barrel	93,979.00	18%	16,916.22	110,895.22	16,916.22	93,979.00	40	3,759,160.00	676,648.80	4,435,808.80
9	TATA HITACHI PREMIUM HD	TS00025	Barrel	86,815.00	18%	15,626.70	102,441.70	15,626.70	86,815.00	3	260,445.00	46,880.10	307,325.10
10	TATA HITACHI HYDRAULIC OIL 46HN	TS00008	Barrel	88,059.00	18%	15,850.62	103,909.62	15,850.62	88,059.00	18	1,585,062.00	285,311.16	1,870,373.16
11	TATA HITACHI TG90 GEAR OIL	TS00004	Barrel	76,495.00	18%	13,769.10	90,264.10	13,769.10	76,495.00	14	1,070,930.00	192,767.40	1,263,697.40
				TOTAL							**28,309,022.00**	**5,095,623.96**	**33,404,645.96**

Tata Hitachi Construction Machinery Co. Pvt. Ltd.

For items sourced indigenously in INR (by bidders quoting for equipment in foreign currency) for fitment in the equipment during commissioning of the equipment														
					Unit Values (in Rs.)									
Sl. No.	Item Description with Make, Model & Part No. (if applicable)			Unit of Measurement	FOR Destination Price after PJ	GST		Landed Price	Input Tax Credit	Net Landed Price after	Quantity of items required	Total FOR Destination Price of all items	Total GST Amount of all items	Total Landed Price for all Items sourced
						Rate	Amount							
1	2			3	4	5	6=4*5	7=4+6	8=6	9=7-8	10	11 = 4*10	12=6*10	13=7*10
	Item Description	Item make & Model	Part No./Full specification											
1	Field switch	Mine Line Pvt Ltd/Electroteknica Engineering Pvt. Ltd.	Not applicable	Nos.	750,000.00	18%	135,000.00	885,000.00	135,000.00	750,000.00	1	750,000.00	135,000.00	885,000.00
2	Trailing Cable	Apar Industries Limited	Not applicable	Nos.	1,750,000.00	18%	315,000.00	2,065,000.00	315,000.00	1,750,000.00	1	1,750,000.00	315,000.00	2,065,000.00
3	Capacitor bank	Mine Line Pvt Ltd/Prayaas Automation	Not applicable	Nos.	500,000.00	18%	90,000.00	590,000.00	90,000.00	500,000.00	1	500,000.00	90,000.00	590,000.00
4	Isolator Switch	Pioneer Enterprises/A-BOND STRANDS PVT. LTD	Not applicable	Nos.	500,000.00	18%	90,000.00	590,000.00	90,000.00	500,000.00	1	500,000.00	90,000.00	590,000.00
5	Auto fire suppression system	Associated Engineers/Ansul/ Southern electronics	Not applicable	Nos.	2,500,000.00	18%	450,000.00	2,950,000.00	450,000.00	2,500,000.00	1	2,500,000.00	450,000.00	2,950,000.00
												6,000,000.00	**1,080,000.00**	**7,080,000.00**

Tata Hitachi Construction Machinery Co. Pvt. Ltd.

Tata Hitachi Construction Machinery Co. Pvt. Ltd.

12/08/25

Details of Training Charges										
1	2	3	4	5	6	7	8	9	10	11
Sl No	Type of Personnel	At Manufacturer's Training Facility available in India				At Site				Total Charges
		No.	Period (Week)	Total Man Weeks (3x4)	Rate Per Man Per Week Rs	No.	Period (Week)	Total Man Weeks (7x8)	Rate Per Man per week Rs	(5x6)+(9x10) Rs
1	Mech Engineer	1	1	1	0	1	1	1	0	0
2	Elec Engineer	1	1	1	0	1	1	1	0	0
3	Mech Supervisor	1	1	1	0	1	1	1	0	0
4	Elec Supervisor	1	1	1	0	1	1	1	0	0
5	Mech Fitter	0	0	-	0	3	1	3	0	0
6	Electrician	0	0	-	0	3	1	3	0	0
7	Operator	0	0	-	0	3	1	3	0	0
	Total	**4**		**4**	**0**	**13**		**13**	**0**	**0**

Tata Hitachi Construction Machinery Co. Pvt. Ltd.

Notification of Award

कोल इण्डिया लिमिटेड
(महारत्न कंपनी)
(भारत सरकार उपक्रम)
सामग्री प्रबंधन विभाग
'कोल भवन', प्रीमिसेस नं.04- एमएआर,
प्लॉट सं.-एएफ-III, एक्शन एरिया-1 ए, न्यूटाउन,
राजरहाट, कोलकाता-700 156,
वेबसाइट: www.coalindia.in
सी आई एन सं. L23109WB1973GOI028844
ईमेल:gmmm.cil@coalindia.in

5 DECADES OF UNEARTHING ENERGY

COAL INDIA LIMITED
(A Maharatna Company)
(A Govt. of India Undertaking)
Materials Management Division,
'Coal Bhawan', Premises No.04-MAR,
Plot No-AF-III, Action Area -1A, NewTown,
Rajarhat, Kolkata – 700 156
Website: www.coalindia.in
CIN No.L23109WB1973GOI028844
E mail: gmmm.cil@coalindia.in

Ref. No. CIL/C2D/20 Cum EHF Shovel/R-151/394/159 Date: 03.06.2025

To
M/s Tata Hitachi Construction Machinery Company Private Limited
Jubilee Building, email:rishi.raj@tatahitachi.co.in
45, Museum Road,
Bangalore - 560025, India

Notification of Award

Dear Sirs,

विषय: Supply, Installation and Commissioning of 2 nos. of 20 CuM Electric Hydraulic Face Shovels (Make - Hitachi Model – EX3600E-6) along with Consumable Spares and Consumables for 12 months of warranty period from the date of commissioning of the equipment and thereafter Spares and Consumables for a period of 7 years under Spares Cost Cap

संदर्भ: 1. Our Open Global e-Tender No. CIL/C2D/20 Cum EHF Shovel/R-151/394 dated 02.11.2023 and Tender ID: 2023_CILHQ_292777_1
2. Your e-offer no. THCM/CIL/20 CuM EHFS/FY2324/Bid Offer/01 dated 27.12.2023 submitted vide Bid ID: 1015459 through CIL's e-procurement portal and subsequent correspondence last being letter dated 15.04.2025

With reference to the above and in terms of the Clause - 32 of Section-II – Instructions to Bidders (ITB) of the Tender Document, Notification of Award is hereby issued to you confirming acceptance of your offer for Supply, Installation and Commissioning of 2 nos. of 20 CuM Electric Hydraulic Face Shovels (Make - Hitachi, Model – EX3600E-6) along with Consumable Spares and Consumables for 12 months of warranty period from the date of commissioning of the equipment and thereafter Spares and Consumables for a period of 7 years under Spares Cost Cap under NCD at the prices mentioned hereinunder and terms & conditions of the Tender Document, accepted by you. The Salient terms are mentioned below:

1. A Tripartite Contract shall be concluded for Supply, Installation and Commissioning of 2 nos. of 20 CuM Electric Hydraulic Face Shovels **(Make - Hitachi Model – EX3600E-6)** along with Consumable Spares and Consumables for 12 months of warranty period from the date of commissioning of the equipment and thereafter Spares and Consumables for a period

03/06/25

Tata Hitachi Construction Machinery Co. Pvt. Ltd.

12/08/25

of 7 years under Spares Cost Cap amongst Coal India Limited, M/s Hitachi Construction Machinery Co. Ltd., Japan and M/s Tata Hitachi Construction Machinery Company Private Limited, Bangalore.

2. The Contract and Integrity Pact are to be signed by the authorized representatives of M/s Hitachi Construction Machinery Co., Ltd and M/s Tata Hitachi Construction Machinery Company Private Limited.

3. The contract shall be concluded on CIP (Final Place of Destination) basis.

4. The Prices shall be as under :

A. Equipment Price:

Sl. No.	Description	Currency	Value
1	FOB Price (per equipment) inclusive of Agency Commission (Indian Agency is NIL.)	JPY	47,00,75,572.00
2	Marine Freight Charges upto Port of Entry in India	JPY	4,00,17,291.00
3	Marine Insurance Charges	JPY	3,20,028.00
4	CIF Price at Port of Entry in India	JPY	51,04,12,891.00
5	Assessable Value	JPY	51,04,12,891.00
6	Basic Customs Duty (BCD) on Assessable CIF Value	JPY	0.00
7	Social Welfare Surcharge (SWS) on BCD	JPY	0.00
8	IGST @ 18 %	JPY	9,18,74,320.38
9	GST @ 5 %on marine freight	JPY	20,00,864.55
10	GST @ 18 % on Indian Agency Commission	JPY	0.00
11	Total CIF Value incl. GST on (Marine Freight + Ind. Agency Commission) (Exchange Rate JPY 1 = Rs 0. 5234)	Rs.	26,81,97,359.65
12	Total Customs Duty	JPY	9,18,74,320.38
13	Total Customs Duty (Exchange Rate JPY 1 = Rs 0.5234)	Rs.	4,80,87,019.29
14	Port charges, clearing forwarding charges and other incidental charges	Rs.	12,10,000.00
15	GST @ 18 % on Port charges, clearing forwarding charges and other incidental charges.	Rs.	2,17,800.00
16	Inland Transportation & Insurance for delivery upto Final Place of Destination	Rs.	42,00,000.00
17	GST @ 18 % on Inland Transportation & Insurance for delivery upto Final Place of Destination	Rs.	7,56,000.00

03/08/25

Tata Hitachi Construction Machinery Co. Pvt. Ltd.

12/08/25

18	Erection & Commissioning Charges	Rs.	16,00,000.00
19	GST @ 18 % on Erection & Commissioning	Rs.	2,88,000.00
20	Total Price of all Items sourced in INR required for fitting in the equipment during commissioning of the equipment	Rs.	60,00,000.00
21	Total GST applicable on all Items sourced in INR required for fitting in the equipment during commissioning of the equipment	Rs.	10,80,000.00
22	CIP Price per Equipment without GST	Rs.	28,01,60,107.15
23	GST	Rs.	5,14,76,071.79
24	CIP Price per Equipment with GST (Landed Price)	Rs.	33,16,36,178.94
25	Total Quantity of Equipment (Nos.)		02
26	CIP Price of Total Quantity of Equipment without GST	Rs.	56,03,20,214.30
27	Total GST	Rs.	10,29,52,143.58
28	**CIP Price of Total Quantity of Equipment with GST**	Rs.	66,32,72,357.88

B. Consumable Spares and Consumables for 12 months of warranty period from the date of commissioning of the equipment and thereafter Spares and Consumables for a period of 7 years under Spares Cost Cap

Sl No.	Description	Value per Equipment in INR	Extended Value for 2 nos. Equipment in INR
Warranty Consumable Spares & Consumables (quoted in INR)			
1	Total FOR Destination Price for Consumable Spares & Consumables	2,83,09,022.00	5,66,18,044.00
2	Total GST for Consumable Spares & Consumables	50,95,623.96	1,01,91,247.92
3	Total Landed Price for Consumable Spares & Consumables with GST	3,34,04,645.96	6,68,09,291.92
2nd year Spares & Consumables (quoted in INR)			
1	Total FOR Destination Price	4,26,99,401.00	8,53,98,802.00
2	Total GST	76,85,892.00	1,53,71,784.00
3	Total Landed Price with GST	5,03,85,293.00	10,07,70,586.00
3rd year Spares & Consumables (quoted in INR)			
1	Total FOR Destination Price	7,45,50,330.00	14,91,00,660.00

03/08/25

Tata Hitachi Construction Machinery Co. Pvt. Ltd.

12/08/25

2	Total GST	1,34,19,059.00	2,68,38,118.00
3	Total Landed Price with GST	8,79,69,389.00	17,59,38,778.00
	4th year Spares & Consumables (quoted in INR)		
1	Total FOR Destination Price	11,62,68,642.00	23,25,37,284.00
2	Total GST	2,09,28,356.00	4,18,56,712.00
3	Total Landed Price with GST	13,71,96,998.00	27,43,93,996.00
	5th year Spares & Consumables (quoted in INR)		
1	Total FOR Destination Price	10,81,69,001.00	21,63,38,002.00
2	Total GST	1,94,70,420.00	3,89,40,840.00
3	Total Landed Price with GST	12,76,39,421.00	25,52,78,842.00
	6th year Spares & Consumables (quoted in INR)		
1	Total FOR Destination Price	9,24,35,084.00	18,48,70,168.00
2	Total GST	1,66,38,315.00	3,32,76,630.00
3	Total Landed Price with GST	10,90,73,399.00	21,81,46,798.00
	7th year Spares & Consumables (quoted in INR)		
1	Total FOR Destination Price	14,10,10,035.00	28,20,20,070.00
2	Total GST	2,53,81,806.00	5,07,63,612.00
3	Total Landed Price with GST	16,63,91,841.00	33,27,83,682.00
	8th year Spares & Consumables (quoted in INR)		
1	Total FOR Destination Price	8,12,41,442.00	16,24,82,884.00
2	Total GST	1,46,23,460.00	2,92,46,920.00
3	Total Landed Price with GST	9,58,64,902.00	19,17,29,804.00
Total Basic Price for warranty spares and Consumable Spares and Consumables for 84 months with GST		68,46,82,957.00	136,93,65,914.00
GST on warranty spares and Consumable Spares and Consumables for 84 months with GST		12,32,42,931.96	24,64,85,863.92
Total Landed Price for warranty spares and Consumable Spares and Consumables for 84 months with GST		80,79,25,888.96	161,58,51,777.92

- Breakup of Erection & Commissioning items sourced in INR & warranty spares & consumables will be indicated in the contract

C. Total Value of Equipment and Spares & Consumables for 8 years

Description	Value per Equipment in INR	Extended Value for 2 nos. Equipment in INR
Total Price for Equipment, Consumable Spares and Consumables for warranty period and spares and Consumables for 84 months without GST	96,48,43,064.15	192,96,86,128.30
Total GST on Equipment, Consumable Spares and Consumables for warranty period and spares and Consumables for 84 months	17,47,19,003.75	34,94,38,007.50
Total Landed Price for Equipment, Consumable Spares and Consumables for warranty period and spares and Consumables for 84 months with GST	113,95,62,067.90	227,91,24,135.80

5. **Letter of Credit (LC)**

LC to be opened in the name of "M/s Hitachi Construction Machinery Co., Ltd." for CIF value of Equipment. LC shall be opened by the Paying Authority. The payment of INR component of the price of equipment and spares & consumables shall be made to M/s Tata Hitachi Construction Machinery Company Private Limited.

For the goods & services quoted in INR, execution of such Goods and Services shall be made by M/s Tata Hitachi Construction Machinery Co. Pvt. Ltd. (the Indian Subsidiary) and the payment of the same shall be made to M/s Tata Hitachi Construction Machinery Company Private Limited.

M/s Tata Hitachi Construction Machinery Company Private Limited, being an Indian subsidiary of M/s Hitachi Construction Machinery Limited, Japan has not quoted any agency commission.

6. **Paying Authority**: Paying authority shall be General Manager (Fin), SECL for payment in Foreign currency through opening of LC and for INR Payment.

7. **Payment of Custom Duty**: MM Division, CIL will pay Customs Duty directly to Customs authority by Electronic Fund Transfer.

8. **Security Deposit:**

You are requested to arrange to furnish the following Security Deposit as per Clause-34 of ITB, Section-II and Clause-1 of SCC, Section-IV of the Tender document, within 30 days from date of Notification of Award:

*A. **Security Deposit for Equipment quoted in JPY:***

For JPY 6,33,61,899.00 (Japanese Yen Six Crore Thirty Three Lakhs Sixty One Thousand Eight Hundred Ninety Nine Only) only through RTGS/NEFT/IMPS/e-BG/other digital modes or in the form of a Bank Guarantee as per format enclosed as Annexure-10, Sample Forms, Section-VII of the Tender Document, from a RBI

Tata Hitachi Construction Machinery Co. Pvt. Ltd.

Scheduled Bank in India (on a non-judicial stamp paper). The Security Deposit Bank Guarantee should be valid upto 3 months after the supply and commissioning of all the equipment covered in the contract.

B. Security Deposit for Consumable Spares & Consumables for 12 months of Warranty Period from the date of commissioning of the Equipment and thereafter Consumable Spares and Consumables for 7 (Seven) years under cost Cap quoted in INR

For Rs. 1,66,39,185.00.00 (Rupees One Crore Sixty Six Lakhs Thirty Nine Thousand One Hundred Eighty Five Only) only through RTGS/NEFT/IMPS/e-BG/other digital modes or in the form of a Bank Guarantee as per format enclosed as Annexure-10, Sample Forms, Section-VII of the Tender document, from a RBI Scheduled Bank in India (on a non-judicial stamp paper). The Security Deposit Bank Guarantee should be valid upto 3 months after the supply and commissioning of all the equipment covered in the contract.

The Security Deposit is to be submitted through RTGS/NEFT/IMPS/e-BG/other digital modes or in the form of a Bank Guarantee as per format enclosed as [Annexure-10], Sample Forms, Section-VII of the Tender document, from a RBI Scheduled Bank in purchaser's country (on a non-judicial stamp paper) within 30 days from date of Notification of Award. In case the SDBG is not submitted within 30 days from the date of NoA, a penalty equivalent to 0.5% (half percent) of SD amount for delay of each week or part thereof (period of delay is to be calculated from the 31st day from the date of NoA to the date of receipt of full SD shall be levied and paid by the successful tenderer along with the SDBG. However, subject to force majeure conditions, delay in submission of SDBG beyond 90 days from the date of NoA may attract annulment of the award and forfeiture of EMD.

The Bank Guarantee shall be issued under "Structured Financial Messaging System" and as per procedure laid down in clause 1.8 of SCC of Tender document.

9. Allocation : Gevra, SECL

10. Port of Shipment/ Loading: Hitachinaka/Kobe/Yokohama, Japan Sea Port as per your offer.

11. Port of Arrival in India: Ennore/ Chennai/Kolkata/Mumbai/Paradip/ Haldia, India Sea Port as per your offer.

12. Country of Origin: Japan

13. All other terms and conditions including technical specifications shall be as per Tender document and as agreed by you.

14. Signing of Contract:

Tata Hitachi Construction Machinery Co. Pvt. Ltd.

03/08/25

12/08/25

As per Clause – 33.1, ITB, Section-II of the NIT, the draft copy of the agreement/contract will be sent within 15(fifteen) days from the date of issue of LOA.

As per clause no.33.2, ITB, Section-II of the NIT, the agreement/contract shall be signed within 15 days of receipt of the draft copy of the agreement.

You are requested to intimate the names and designation of the persons who will sign the agreement on your behalf and on behalf of M/s Hitachi Construction Machinery Co., Ltd., Japan along with the names and designation of witnesses.

This Notification of Award will be binding on you until a formal contract is signed as per Clause–32.2 of ITB, Section-II of the Tender Document.

You are requested to confirm receipt of this Notification of Award within 7 days of its issue and arrange to furnish the above Security Deposit(s).

Yours faithfully,
For & on Behalf of Coal India Limited

03/06/25
(Nadeem Khan)
प्रबंधक(सामग्री प्रबंधन)

03/06/2025
(Avinash Kumar)
महाप्रबंधक (सामग्री प्रबंधन)

Copy to:

1. M/s Hitachi Construction Machinery Co., Ltd., Ueno East Tower, 14th Floor, 2-16-1, Higashiueno, Taito-ku, Yokoyo, Japan – 110-0015
2. GM(MM)/HOD, CIL
3. GM(Excv.)HOD, EED, CIL
4. GM(Finance), CIL
5. TS to Dir(Technical), CIL
6. GM(Excavation)/GM(MM)/GM(Finance), SECL
7. Depot Officer, Regional Stores, Gevra Area, SECL (South Eastern Coalfields Limited), Dist-Korba, Chhattisgarh - 495452.

Tata Hitachi Construction Machinery Co. Pvt. Ltd.

12/08/25

Integrity Pact

INTEGRITY PACT

General

This pre-bid pre-contract Agreement (hereinafter called the Integrity Pact) is made on 12.08.2025, between on one hand, Coal India Limited / Subsidiary Cos. acting through Shri S.M.Alli, General Manager (MM)/HOD, CIL (hereinafter called the "BUYER / Principal", which expression shall mean and include, unless the context otherwise requires, his successors in office and assigns) of the First Part ***and*** M/s Hitachi Construction Machinery Co., Ltd., Japan represented by Shri Toshiki Onishi, Director, M/s Tata Hitachi Construction Machinery Company Private Limited and M/s Tata Hitachi Construction Machinery Company Private Limited by Rishi Raj Kishore (Head – Government & Institutional Mining Sales) (hereinafter called the "BIDDER/Seller/Contractor" which expression shall mean and include, unless the context otherwise requires, his successors and permitted assigns) of the Second Part.

WHEREAS the BUYER proposes to procure 2 nos. of 20 CuM Electric Hydraulic Face Shovels(Make - Hitachi, Model – EX3600E-6, 21 CuM) along with Consumable Spares and Consumables for warranty period of one year and Spares & Consumables for post warranty period of 7 years under Spares Cost Cap and the BIDDER/Seller is willing to offer/has offered the stores and

WHEREAS the BIDDER is a private company/~~public company/Government undertaking/partnership/registered export agency~~, constituted in accordance with the relevant law in the matter and the BUYER is a Central Public Sector Unit.

NOW, THEREFORE,

To avoid all forms of corruption by following a system that is fair, transparent and free from any influence/prejudiced dealings prior to, during and subsequent to the currency of the contract to be entered into with a view to :-

Enabling the BUYER to obtain the desired said stores/equipment at a competitive price in conformity with the defined specifications by avoiding the high cost and the distortionary impact of corruption on public procurement, and

Enabling BIDDERs to abstain from bribing or indulging in any corrupt practice in order to secure the contract by providing assurance to them that their competitors will also abstain from bribing and other corrupt practices and the BUYER will commit to prevent corruption, in any form, by its officials by following transparent procedures.

The parties hereto hereby agree to enter into this Integrity Pact and agree as follows:

Section 1 – Commitments of the Principal

(1) The Principal commits itself to take all measures necessary to prevent corruption and to observe the following principles:-

a. No employee of the Principal, personally or through family members, will in connection with the tender for , or the execution of a contract, demand ; take a promise for or accept, for self or third person, any material or immaterial benefit which the person is not legally entitled to.

b. The Principal will, during the tender process treat all Bidder(s) with equity and reason.

The Principal will in particular, before and during the tender process, provide to all Bidder(s) the same information and will not provide to any Bidder(s) confidential / additional information through which the Bidder(s) could obtain an advantage in relation to the tender process or the contract execution.

c. Principal will exclude from the process all known prejudiced persons.

(2) If the Principal obtains information on the conduct of any of its employees which is a criminal offence under the IPC/ PC Act, or if there be a substantive suspicion in this regard, the Principal will inform the Chief Vigilance Officer and in addition can initiate disciplinary actions.

Section 2 - Commitments of the Bidder(s)/ Contractor(s)

(1) The Bidder(s) / Contractor(s) commit themselves to take all measures necessary to prevent corruption. The Bidder(s) / Contractor(s) commit themselves to observe the following principles during participation in the tender process and during the contract execution.

a. The Bidder(s) / Contractor(s) will not, directly or through any other person or firm, offer, promise or give to any of the Principal's employees involved in the tender process or the execution of the contract or to any third person any material or other benefit which he/ she is not legally entitled to, in order to obtain in exchange any advantage of any kind whatsoever during the tender process or during the execution of the contract.

b. The Bidder(s) / Contractor(s) will not enter with other Bidders info any undisclosed agreement or understanding, whether formal or informal. This applies in particular to prices, specifications, certifications, subsidiary contracts, submission or non- submission of bids or any other actions to restrict competitiveness or to introduce cartelisation in the bidding process.

c. The Bidder(s) / Contractor(s) will not commit any offence under the relevant IPC/ PC Act; further the Bidder(s) / Contractor(s) will not use improperly, for purposes of competition or personal gain, or pass on to others, any information or document provided by the Principal as part of the business relationship, regarding plans, technical proposals and business details, including information contained or transmitted electronically.

d. The Bidder(s) / Contractors(s) of foreign origin shall disclose the name and address of the Agents/ representatives in India , if any, Similarly the Bidder(s) /Contractors(s) of Indian Nationality shall furnish the name and address of the foreign principals, if any. Further details as mentioned in the "Guidelines on Indian Agents of Foreign Suppliers" shall be disclosed by the Bidder(s) / Contractor(s).Further, as mentioned in the Guidelines all the payments made to the Indian agent/ representative have to be in Indian Rupees only. The guidelines and terms and conditions for India agents of foreign supplier shall be as per the provisions mentioned in the NIT.

Tata Hitachi Construction Machinery Co. Pvt. Ltd.

12/08/25

12/08

e. The Bidder(s) / Contractor(s) will, when presenting their bid, disclose any and all payments made, is committed to or intends to make to agents, brokers or any other intermediaries in connection with the award of the contract.

f. Bidder(s) / Contractor(s) who have signed the Integrity Pact shall not approach the Courts while representing the matter to IEMs and shall wait for their decision in the matter.

(2) The Bidder(s) / Contractor(s) will not instigate third persons to commit offences outlined above or be an accessory to such offences.

Section 3 - Disqualification from tender process and exclusion from future contracts

If the Bidder, before contract award, has committed a transgression through a violation of Section 2 or in any other form such as to put his reliability or credibility as Bidder into question, the Principal is entitled to disqualify the Bidder from the tender process or to terminate the contract, if already signed, for such reason.

(1) If the Bidder / Contractor / Supplier has committed a transgression through a violation of Section 2 such as to put his reliability or credibility into question, the Principal is also entitled to exclude the

Bidder / Contractor / Supplier from future contract award processes. The imposition and duration of the exclusion will be determined by the severity of the transgression. The severity will be determined by the circumstances of the case. In particular the number of transgressions, the position of the transgressors within the company hierarchy of the Bidder and the amount of the damage. The exclusion will be imposed for a minimum of 6 months and maximum of 3 years.

(2) A transgression is considered to have occurred if the Principal, after due consideration of available facts and evidences within his / her knowledge concludes that there is a reasonable ground to suspect violation of any commitment listed under Section 2 i.e " Commitments of Bidder(s) / Contractor(s).

(3) The Bidder accepts and undertakes to respect and uphold the Principal's absolute right to resort to and impose such exclusion and further accepts and undertakes not to challenge or question such exclusion on any ground, including the lack of any hearing before the decision to resort to such exclusion is taken. This undertaking is given freely and after obtaining independent legal advice.

(4) If the Bidder / Contractor / Supplier can prove that he has restored / recouped the damage caused by him and has installed a suitable corruption prevention system, the Principal may revoke the exclusion prematurely."

Section 4 - Compensation for Damages

(1) If the Principal has disqualified the Bidder(s) from the tender process prior to the award according to Section 3, the Principal is entitled to demand and recover the damages equivalent to Earnest Money Deposit.

(2) If the Principal has terminated the contract according to Section 3, or if the Principal is entitled to terminate the contract according to Section 3, the Principal shall be entitled to demand and recover from the Contractor liquidated damages of the Contract value of the amount equivalent to Performance Bank Guarantee.

Section 5 - Previous transgression

(1) The Bidder declares that no previous transgressions occurred in the last three years with any other Company in any country conforming to the anti-corruption approach or with any Public Sector Enterprise in India that could justify his exclusion from the tender process.

(2) If the Bidder makes incorrect statement on this subject, he can be disqualified from the tender process or action can be taken as per the procedure mentioned in "Guidelines on Banning of business dealings".

Section 6 - Equal treatment of all Bidders / Contractors / Subcontractors

(1) In case of Sub-contracting, the Principal Contractor shall take the responsibility of the adoption of Integrity Pact by the Sub-contractor.

(2) The Principal will enter into agreements with identical conditions as this one with all Bidders and Contractors.

(3) The Principal will disqualify from the tender process all bidders who do not sign this Pact or violate its provisions.

Section 7 - Criminal charges against violating Bidder(s) / Contractor(s) / Subcontractor(s)

If the Principal obtains knowledge of conduct of a Bidder, Contractor or Subcontractor, or of an employee or a representative or an associate of a Bidder, Contractor or Subcontractor which constitutes corruption, or if the Principal has substantive suspicion in this regard, the Principal will inform the same to the Chief Vigilance Officer.

Tata Hitachi Construction Machinery Co. Pvt. Ltd.

Section 8 - Independent External Monitor

(1) The Principal appoints competent and credible Independent External Monitor for this Pact after approval by Central Vigilance Commission. The task of the Monitor is to review independently and objectively, whether and to what extent the parties comply with the

12/08/25

obligations under this agreement.

(2) The Monitor is not subject to instructions by the representatives of the parties and performs his/ her functions neutrally and independently. The Monitor would have access to all Contract documents, whenever required. It will be obligatory for him / her to treat the information and documents of the Bidders/Contractors as confidential.
He/ she reports to the Chairman, Coal India Limited / CMD, Subsidiary Companies

(3) The Bidder(s) / Contractor(s) accepts that the Monitor has the right to access without restriction to all Project documentation of the Principal including that provided by the Contractor. The Contractor will also grant the Monitor, upon his/ her request and demonstration of a valid interest, unrestricted and unconditional access to their project documentation. The same is applicable to Sub-contractors.

(4) The Monitor is under contractual obligation to treat the information and documents of the Bidder(s) / Contractor(s) / Sub-contractor(s) with confidentiality. The Monitor has also signed declarations on 'Non-Disclosure of Confidential Information ' and of 'Absence of Conflict of Interest'. In case of any conflict of interest arising at a later date, the IEM shall inform Chairman, Coal India Limited / CMD, Subsidiary Companies and recuse himself / herself from that case.

(5) The Principal will provide to the Monitor sufficient information about all meetings among the parties related to the Project provided such meetings could have an impact on the contractual relations between the Principal and the Contractor. The parties offer to the Monitor the option to participate in such meetings.

(6) As soon as the Monitor notices, or believes to notice, a violation of this agreement, he/ she will so inform the Management of the Principal and request the Management to discontinue or take corrective action, or to take other relevant action. The monitor can in this regard submit non-binding recommendations. Beyond this, the Monitor has no right to demand from the parties that they act in a specific manner, refrain from action or tolerate action.

(7) The Monitor will submit a written report to the Chairman, Coal India Limited / CMD, Subsidiary Companies within 8 to 10 weeks from the date of reference or intimation to him by the Principal and, should the occasion arise, submit proposals for correcting problematic situations.

(8) If the Monitor has reported to the Chairman, Coal India Limited / CMD, Subsidiary Companies, a substantiated suspicion of an offence under relevant IPC/ PC Act, and the Chairman, Coal India Limited / CMD, Subsidiary Companies has not, within the reasonable time taken visible action to proceed against such offence or reported it to the Chief Vigilance Officer, the Monitor may also transmit this information directly to the Central Vigilance Commissioner.

(9) The word 'Monitor' would include both singular and plural.

Section 9 - Pact Duration

This Pact begins when both parties have legally signed it. It expires after the completion of the contract. Any violation of the same would entail disqualification of the bidders and exclusion from future business dealings.

If any claim is made / lodged during this time, the same shall be binding and continue to be valid despite the lapse of this pact as specified above, unless it is discharged / determined by Chairman Coal India Limited / CMD, Subsidiary Companies.

Section 10 - Other provisions

(1) Changes and supplements as well as termination notices need to be made in writing. Side agreements have not been made.

(2) If the Contractor is a partnership or a consortium, this agreement must be signed by all partners or consortium members.

(3) Should one or several provisions of this agreement turn out to be invalid, the remainder of this agreement remains valid. In this case, the parties will strive to come to an agreement to their original intentions.

(4)Issues like Warranty / Guarantee etc. shall be outside the purview of IEMs.

(5) In the event of any contradiction between the Integrity Pact and its Annexure, the Clause in the Integrity Pact will prevail.

Section 11- Facilitation of Investigation

In case of any allegation of violation of any provisions of this Pact or payment of commission, the BUYER or its agencies shall be entitled to examine all the documents including the Books of Accounts of the BIDDER and the BIDDER shall provide necessary information and documents in English and shall extend all possible help for the purpose of such examination.

Section 12- Law and Place of Jurisdiction

This Pact is subject to Indian Law. The place of performance and jurisdiction is the seat of the BUYER.

Section 13 - Other Legal Actions.

Tata Hitachi Construction Machinery Co. Pvt. Ltd.

12/08/25

Integrity Pact

The actions stipulated in this Integrity Pact are without prejudice to any other legal action that may follow in accordance with the provisions of the extant law in force relating to any civil or criminal proceedings.

For the Purchaser

12/08/25

Name : S.M.Alli
Designation : General Manager(MM)/HoD
Name of Company: Coal India Limited

महाप्रबंधक (सा.प्र.)-विभागाध्यक्ष
GM (MM) - HOD
सी आई एल (मु.) / CIL (HQ.)
कोलकाता / KOLKATA

For the Supplier

12.8.2025

Name: Toshiki Onishi
Designation: Director: Sales & Marketing , Customer Support Department
Name of Company: M/s Tata Hitachi Construction Machinery Company Private Limited
For and behalf of M/s Hitachi Construction Machinery Co., Ltd

12.8.2025

Name : Rishi Raj Kishore
Designation: Head – Government & Institutional Mining Sales
Name of Company: M/s Tata Hitachi Construction Machinery Company Private Limited

Witnesses:

12/08/2025

1. Name : Avinash Kumar
Designation: General Manager (MM)
Name of Company: Coal India Limited

12/08/25

2. Name: Nadeem Khan
Designation: Manager(MM)
Name of Company: Coal India Limited

Witnesses:

12/08/25

1. Name: Satoshi Mochizuki
Designation: Senior Advisor-Mining Sales & Service
Name of Company: M/s Tata Hitachi Construction Machinery Co. Pvt. Ltd.
For and behalf of M/s Hitachi Construction Machinery Co., Ltd

Aditya Dev 12/08/25

2. Name: Aditya Dev
Designation: Manager – Mining sales
Name of Company: M/s Tata Hitachi Construction Machinery Co. Pvt. Ltd.

Tata Hitachi Construction Machinery Co. Pvt. Ltd.

Place: Kolkata
Date: 12/08/2025

Annexure(s)

Annexure- 1(a)

Security Deposit Bank Guarantees

भारतीय स्टेट बैंक
STATE BANK OF INDIA

STATE BANK OF INDIA

Form No. 0686125BG0B00481 Date 26-06-2025

M/S. COAL INDIA LIMITED,
COAL BHAWAN, PREMISES NO. 4,
ACTION AREA IA, NEW TOWN,

Dear Sir,
Guarantee No 0686125BG0B00481
Amount of Guarantee Rs. 16,639,185.00 /-Guarantee cover from 26-06-2025 to 31-07-2027 Last date for lodgement of claim – 31-07-2028

This Deed of guarantee executed by the State Bank of India constituted under the State Bank of India Act, 1955 having its Central Office at Nariman Point, Mumbai and amongst other places, a branch at OB BANGALORE in favour of M/S. COAL INDIA LIMITED, for an amount not exceeding Rs. 16,639,185.00 /- (Rupees One Crore Sixty Six Lakh Thirty Nine Thousand One Hundred and Eighty Five Rupees only) at the request of TATA HITACHI CONSTRUCTION MACHINERY

This Guarantee is issued subject to the condition that the liability of the bank under this Guarantee is limited to a maximum of Rs. 16,639,185.00 /- (Rupees One Crore Sixty Six Lakh Thirty Nine Thousand One Hundred and Eighty Five Rupees only) and the Guarantee shall remain in full force up to 31-07-2027 and cannot be invoked otherwise than by a written demand or claim under this Guarantee served on the Bank on or before the 31-07-2028

Notwithstanding anything contrary contained in any law for the time being in force or banking practice, this guarantee shall not be assignable or transferable by the Counter party. Notice or invocation by any person such as assignee, transferee or agent of Counter party shall not be entertained by the Bank. Any invocation of guarantee can be made only by the Counter party directly."

The beneficiaries are advised in their own interest to verify the genuineness of the Guarantee with the BG issuing Branch.

OB BANGALORE
OVERSEAS BRANCH, BANGALORE
NO.65 ST. MARKS ROAD
BANGALORE
sbi.06861@sbi.co.in

For STATE BANK OF INDIA

THOMAS JACOB K.J.
SS. No. T-190
PF. No.: 7292732

Tata Hitachi Construction Machinery Co. Pvt. Ltd.

0686125BG0B00481

26-06-2025

सत्यमेव जयते

INDIA NON JUDICIAL

Government of Karnataka

Rs. 300

e-Stamp

Certificate No.	:	IN-KA71478176667837X
Certificate Issued Date	:	27-Jun-2025 12:21 PM
Account Reference	:	NONACC (FI)/ kacrsfl08/ BANGALORE26/ KA-JY
Unique Doc. Reference	:	SUBIN-KAKACRSFL0861805477835647X
Purchased by	:	STATE BANK OF INDIA OVERSEAS BRANCH BANGALORE
Description of Document	:	Article 56(i) Bank Guarantee - If related to paper bank guarantee
Property Description	:	BANK GUARANTEE DOC
Consideration Price (Rs.)	:	0 (Zero)
First Party	:	STATE BANK OF INDIA OVERSEAS BRANCH BANGALORE
Second Party	:	COAL INDIA LIMITED
Stamp Duty Paid By	:	STATE BANK OF INDIA OVERSEAS BRANCH BANGALORE
Stamp Duty Amount(Rs.)	:	300 (Three Hundred only)

Prathibha Shaala Mahila V.S.S.N. Authorised Signature Bangalore

Please write or type below this line

THIS STAMP PAPER FORMS
THE PART & PARCEL OF
BANK GUARANTEE NO. 0686125BG0B00481 dated 26.06.2025.

For STATE BANK OF INDIA

THOMAS JACOB K.J.
SS. No. T-190
PF. No.: 7292732

For STATE BANK OF INDIA

MANOJ. M.
P.F. No. 6229964

Tata Hitachi Construction Machinery Co. Pvt. Ltd.

Statutory Alert:

1. The authenticity of this Stamp certificate should be verified at 'www.shcilestamp.com' or using e-Stamp Mobile App of Stock Holding. Any discrepancy in the details on this Certificate and as available on the website / Mobile App renders it invalid.
2. The onus of checking the legitimacy is on the users of the certificate.
3. In case of any discrepancy please inform the Competent Authority.

SBI

Security Deposit Bank Guarantee

M/s. Coal India Limited,
Coal Bhawan
Premises No. 4,
Action Area IA,
New Town, Rajarhat,
Kolkata-700 156, India

Re : Bank Guarantee in respect of Notification of Award vide no. CIL/C2D/20 Cum EHF Shovel/R-151/394/159 dated 03.06.2025 between M/s. Coal India Limited (Name of Purchaser Company) and M/s Tata Hitachi Construction Machinery Company Private Limited (Name of Supplier Company)

Messers M/s Tata Hitachi Construction Machinery Company Private Limited a Company / Firm having its office at No. Jubilee Building, 45 Museum Road Bangalore-560025 (hereinafter called 'the Contractor') has received the Notification of Award / Purchase Order vide no. CIL/C2D/20 Cum EHF Shovel/R-151/394/159 dated 03.06.2025 (hereinafter called 'the said Agreement') with M/s. Coal India Limited (Name of the Purchaser Company) (hereinafter called 'the Company') to supply of Consumable Spares and Consumables for 12 Months of warranty period from the date of commissioning of the equipment and thereafter Spares & Consumables for a period of 7 years under Spares Cost Cap for of 2 Nos of 20 CuM Electric Hydraulic Face Shovels (Make – Hitachi, Model - EX3600E-6) stores/ materials amounting to Rs. 1,66,39,185.00 (Rupees One Crore Sixty-Six Lakh Thirty-Nine Thousand One Hundred and Eighty-Five only) on the terms and conditions contained in the said Notification of Award / Purchase Order.

STATE BANK OF INDIA having its office at OVERSEAS BRANCH, NO.65, ST MARK'S ROAD, BANGALORE 560001 (hereinafter called 'the Bank') has at the request of the Contractor agreed to give the guarantee as hereinafter contained.
We, STATE BANK OF INDIA, OVERSEAS BRANCH, NO.65, ST MARK'S ROAD, BANGALORE 560001 do hereby unconditionally agree with the Company that if the Contractor shall in any way fail to observe or perform the terms and conditions of the said Agreement or shall commit any breach of its obligations thereunder, the Bank shall on demand and without any objection or demur pay to the Company, the said sum of Rs. 1,66,39,185.00 (Rupees One Crore Sixty-Six Lakh Thirty-Nine Thousand One Hundred and Eighty-Five only) or any portion thereof without requiring the Company to have recourse to any legal remedy that may be available to it to compel the Bank to pay the same or calling on the Company to compel such payment by the Contractor.

Any such demand shall be conclusive as regards the liability of the Contractor to the Company and as regards the amount payable by the Bank under this guarantee. The Bank shall not be entitled to withhold payment on the ground that the Contractor has disputed its liability to pay or has disputed the quantum of the amount or that any arbitration proceeding or legal proceeding is pending between the Company and the Contractor regarding the claim.
We, the Bank, further agree that the guarantee shall come into force from the date hereof and shall remain in full force and effect till the period that will be taken for the performance of the said Agreement which is likely to be the 31st day of July 2027 but if the period of Agreement is extended either pursuant to the provisions in the said Agreement or by mutual agreement between the Contractor and the Company, the Bank may renew the period of the guarantee failing which it shall pay to the Company the said sum of Rs. 1,66,39,185.00 (Rupees One Crore Sixty-Six Lakh Thirty-Nine Thousand One Hundred and Eighty-Five only) or such lesser amount out of the said sum of Rs. 1,66,39,185.00 (Rupees One Crore Sixty-Six Lakh Thirty-Nine Thousand One Hundred and Eighty-Five only) as maybe due to the Company and as the Company may demand. This guarantee shall remain in force until the dues of the Company in respect of the said sum of Rs. 1,66,39,185.00 (Rupees One Crore Sixty-Six Lakh Thirty-Nine Thousand One Hundred and Eighty-Five only) are fully satisfied and the Company certifies that the Agreement has been fully carried out by the contractor and discharges the guarantee.
The Bank further agrees with the Company that the Company shall have the fullest liberty without the consent of the Bank and without affecting in any way the obligations hereunder to vary any of the terms and conditions of the said Agreement or to extend the time for performance of the said Agreement from time to time or to postpone for any time or from time to time any of the powers exercisable by the Company against the contractor and to forbear to enforce any of the terms and conditions relating to the said Agreement and the Bank shall not be relieved from its liability by reason of such failure or extension being granted to the contractor or through any forbearance, act or omission on the part of the Company or any indulgence by the Company to the contractor or any other matter or thing whatsoever which under the law relating to sureties would but for this provisions have the effect of relieving or discharging the Guarantor.
The Bank further agrees that in case this guarantee is required for a longer period and it is not extended by the Bank beyond the period

0686125BG0B00481

2025-06-26

For STATE BANK OF INDIA

THOMAS JACOB K.J.
SS. No. T-190
PF. No. 7292732

For STATE BANK OF INDIA

MANOJ. M.
P.F. No. 6229064

Tata Hitachi Construction Machinery Co. Pvt. Ltd.

specified above, the Bank shall pay to the Company the said sum of Rs. 1,66,39,185.00 (Rupees One Crore Sixty-Six Lakh Thirty-Nine Thousand One Hundred and Eighty-Five only) or such lesser sum as may then be due to the Company and as the Company may require.

Notwithstanding anything herein contained the liability of the Bank under this guarantee is restricted to Rs. 1,66,39,185.00 (Rupees One Crore Sixty Six Lakh Thirty Nine Thousand One Hundred and Eighty Five only) The guarantee shall remain in force till the 31st day of July 2027 and unless the guarantee is renewed or a claim is preferred against the Bank within the validity period and/or the claim period from the said date (31st day of July 2027), all rights of the Company under this guarantee shall cease and the Bank shall be released and discharged from all liability hereunder except as provided in the preceding clause.
The Bank has under its constitution power to give this guarantee and the officers who have signed it on behalf of the Bank has authority to do so.

Notwithstanding anything to the contrary contained herein

Our liability under this Guarantee shall not exceed Rs. 1,66,39,185.00 (Rupees One Crore Sixty-Six Lakh Thirty-Nine Thousand One Hundred and Eighty-Five only)

This Bank Guarantee shall remain valid until 31.07.2027.

We are liable to pay guarantee amount or any part thereof under this Bank Guarantee only and only if you serve upon us a written demand or a claim received on or before 31.07.2028.

For STATE BANK OF INDIA

Overseas Branch, Office - [05561] Bangalore-560 001.

THOMAS JACOB K.J.
SS. No. T-190
PF. No. 7292732

For STATE BANK OF INDIA

Overseas Branch, Office - [05561] Bangalore-560 001.

MANOJ. M.
P.F. No. 6229964

ORIGINAL

0686125BG0B00481

2025-06-26

2 2

Tata Hitachi Construction Machinery Co. Pvt. Ltd.

सत्यमेव जयते

INDIA NON JUDICIAL

Government of Karnataka

Rs. 300

e-Stamp

Certificate No.	:	IN-KA79809704582219X
Certificate Issued Date	:	05-Jul-2025 12:20 PM
Account Reference	:	NONACC (FI)/ kacrsfl08/ BANGALORE26/ KA-JY
Unique Doc. Reference	:	SUBIN-KAKACRSFL0877842779033203X
Purchased by	:	STATE BANK OF INDIA OVERSEAS BRANCH BANGALORE
Description of Document	:	Article 56(i) Bank Guarantee - If related to paper bank guarantee
Property Description	:	BANK GUARANTEE DOC
Consideration Price (Rs.)	:	0 (Zero)
First Party	:	STATE BANK OF INDIA OVERSEAS BRANCH BANGALORE
Second Party	:	COAL INDIA LIMITED
Stamp Duty Paid By	:	STATE BANK OF INDIA OVERSEAS BRANCH BANGALORE
Stamp Duty Amount(Rs.)	:	300 (Three Hundred only)

Pragathi Sheela Mahila V.S.S.N. Authorised Signature Bangalore

Please write or type below this line

This Forms Part and Parcel of
Bank Guarantee No. 06861.25B40B00481
ISSUED ON...26-06-2025
AND AMENDED ON..05-07-2025

For STATE BANK OF INDIA

Overseas Branch (06861), Bangalore-560 001

RENUKA.U.V
SS. No.: 4638

For STATE BANK OF INDIA

Overseas Branch (06861), Bangalore-560 001

THOMAS JACOB
SS. No. 7-191
PF. No. 729273

Statutory Alert:
1. The authenticity of this Stamp certificate should be verified at 'www.shcilestamp.com' or using e-Stamp Mobile App of Stock Holding. Any discrepancy in the details on this Certificate and as available on the website / Mobile App renders it invalid.
2. The onus of checking the legitimacy is on the users of the certificate.
3. In case of any discrepancy please inform the Competent Authority.

Hitachi Construction Machinery Co. Pvt. Ltd.

भारतीय स्टेट बैंक
STATE BANK OF INDIA

STATE BANK OF INDIA

Form No. 0686125BG0B00481 Date 05-07-2025

To,
M/S. COAL INDIA LIMITED,
COAL BHAWAN, PREMISES NO. 4,

Dear Sir,

ORIGINAL GUARANTEE NUMBER 0686125BG0B00481
Amount of Guarantee Rs. 16,639,185.00 /-
Guarantee cover from 26-06-2025 to 31-07-2027
Last date for lodgement of claim 31-07-2028
Applicant:TATA HITACHI CONSTRUCTION MACHINERY

1. We hereby inform you that at the request of the above applicant, the captioned Guarantee No. 0686125BG0B00481 issued by us on 26-06-2025 and renewed till 31-07-2027 for an amount of INR 16,639,185.00 has now been extended for further period upto for an amount of INR 16,639,185.00

2. The last date for the receipt of claims under this extended guarantee will be

3. All other terms and conditions as appearing in the Original Guarantee shall apply to this Extension guarantee and shall be read with the Original guarantee for STATE BANK OF INDIA

4. The beneficiaries are advised in their own interest to verify the genuineness of the Amendment of Guarantee with the BG issuing Branch.

OB BANGALORE
OVERSEAS BRANCH, BANGALORE
NO.65 ST. MARKS ROAD
BANGALORE
sbi.06861@sbi.co.in

For STATE BANK OF INDIA
Overseas Branch (06861), Bangalore-560 001
RENUKA U V
SS. No.
PF. No.

0686125BG0B00481

26-06-2025

Tata Hitachi Construction Machinery Co. Pvt. Ltd.

SBI

AMENDMENT DETAILS:
BG REF NO 0686125BG0B00481
AMENDMENT DATE: 05.07.2025

The following details of BG were amended :
1.PLEASE READ IN PAGE 1 , PARA 1, LINE 7 AS 'RS.161,58,51,777.92 (RUPEES ONE HUNDRED SIXTY ONE CRORE FIFTY EIGHT LAKHS FIFTY ONE THOUSAND SEVEN HUNDRED AND SEVENTY SEVEN AND PAISE NINETY TWO ONLY)' INSTEAD OF EXISTING

All other terms and conditions of the original Bank Guarantee remain unchanged. This amendment shall be deemed an integral part of the original Bank Guarantee and should be read together.

For STATE BANK OF INDIA

Overseas Branch (06861), Bangalore-560 001

RENUKA.U.V
SS. No.: 4636
PF. No.: 6197345

For STATE BANK OF INDIA

Overseas Branch (06861), Bangalore-560 001

THOMAS JACOB K.J.
SS. No. T-190
PF. No.: 7292732

ORIGINAL

0686125BG0B00481

2025-06-26

1 1 1

Tata Hitachi Construction Machinery Co. Pvt. Ltd.

12/08/25

सत्यमेव जयते

INDIA NON JUDICIAL

Government of Karnataka

Rs. 300

e-Stamp

Certificate No.	:	IN-KA90911322798254X
Certificate Issued Date	:	17-Jul-2025 11:30 AM
Account Reference	:	NONACC (FI)/ kacrsfl08/ BANGALORE26/ KA-JY
Unique Doc. Reference	:	SUBIN-KAKACRSFL0899236953142874X
Purchased by	:	STATE BANK OF INDIA OVERSEAS BRANCH BANGALORE
Description of Document	:	Article 56(i) Bank Guarantee - If related to paper bank guarantee
Property Description	:	BANK GUARANTEE DOC
Consideration Price (Rs.)	:	0 (Zero)
First Party	:	STATE BANK OF INDIA OVERSEAS BRANCH BANGALORE
Second Party	:	COAL INDIA LIMITED
Stamp Duty Paid By	:	STATE BANK OF INDIA OVERSEAS BRANCH BANGALORE
Stamp Duty Amount(Rs.)	:	300 (Three Hundred only)

Pragathi Sheela Mahila V.S.S.N. Authorised Signature Bangalore

Please write or type below this line

This Forms Part and Parcel of
Bank Guarantee No. 06861 25BGOB00481
ISSUED ON 26-06-2025
AND AMENDED ON 17-07-2025

ಭಾರತೀಯ ಸ್ಟೇಟ್ ಬ್ಯಾಂಕ್ ಪರವಾಗಿ कृते भारतीय स्टेट बैंक
For STATE BANK OF INDIA
Asst. Gen. Manager (IB)
Overseas Branch (06861), Bangalore-560 001
RENUKA.U.V
SS. No.: 4638

ಭಾರತೀಯ ಸ್ಟೇಟ್ ಬ್ಯಾಂಕ್ ಪರವಾಗಿ कृते भारतीय स्टेट बैंक
For STATE BANK OF INDIA
Asst. Gen. Manager (IB)
Overseas Branch (06861), Bangalore-560 001
THOMAS JACOB K.J.
SS. No. T-190
PF. No.: 7292732

Statutory Alert:
1. The authenticity of this Stamp certificate should be verified at 'www.shcilestamp.com' or using e-Stamp Mobile App of Stock Holding. Any discrepancy in the details on this Certificate and as available on the website / Mobile App renders it invalid.
2. The onus of checking the legitimacy is on the users of the certificate.
3. In case of any discrepancy please inform the Competent Authority.

Tata Hitachi Construction Machinery Co. Pvt. Ltd.

12/08/25

SBI

भारतीय स्टेट बैंक
STATE BANK OF INDIA

STATE BANK OF INDIA

Form No. 0686125BG0B00481 Date 17-07-2025

To,
M/S. COAL INDIA LIMITED,
COAL BHAWAN, PREMISES NO. 4,

Dear Sir,

ORIGINAL GUARANTEE NUMBER 0686125BG0B00481
Amount of Guarantee Rs. 16,639,185.00 /-
Guarantee cover from 26-06-2025 to 31-07-2027
Last date for lodgement of claim 31-07-2028
Applicant:TATA HITACHI CONSTRUCTION MACHINERY

1. We hereby inform you that at the request of the above applicant, the captioned Guarantee No. 0686125BG0B00481 issued by us on 26-06-2025 and renewed till 31-07-2027 for an amount of INR 16,639,185.00 has now been extended for further period upto for an amount of INR 16,639,185.00

2. The last date for the receipt of claims under this extended guarantee will be

3. All other terms and conditions as appearing in the Original Guarantee shall apply to this Extension guarantee and shall be read with the Original guarantee for STATE BANK OF INDIA

4. The beneficiaries are advised in their own interest to verify the genuineness of the Amendment of Guarantee with the BG issuing Branch.

OB BANGALORE
OVERSEAS BRANCH, BANGALORE
NO.65 ST. MARKS ROAD
BANGALORE
sbi.06861@sbi.co.in

For STATE BANK OF INDIA

Asst. Gen. Manager (B)
Overseas Branch (06861), Bangalore-GC0-C01

RENUKA.U.V
SS. No.: 4638
PF. No.: 6197345

0686125BG0B00481

26-06-2025

Tata Hitachi Construction Machinery Co. Pvt. Ltd.

SBI

AMENDMENT DETAILS
BG REF No. 0686125BG0B00481
AMENDMENT DATE: 17.07.2025

The following details of BG were amended
IN PAGE 1, PARA 4, LINE4 PLEASE READ AS 'THE BANK SHALL RENEW' INSTEAD OF EXISTING.

Notwithstanding anything to the contrary contained herein-
a) Our liability under this Guarantee shall not exceed Rs.16639185.00/-
b) This Bank Guarantee shall be valid up to 31-07-2027 (being the date of expiry of the guarantee)
c) We are liable to pay the guarantee amount only and only if we receive from you a written demand on or before 31-07-2028 (date, inclusive of claim period, if any)

All other terms and conditions of the original Bank Guarantee remain unchanged. This amendment shall be deemed an integral part of the original Bank Guarantee and should be read together.

ಭಾರತೀಯ ಸ್ಟೇಟ್ ಬ್ಯಾಂಕ್ ಪರವಾಗಿ कृते भारतीय स्टेट बैंक
For STATE BANK OF INDIA
ಸಹಾಯಕ ಪ್ರಧಾನ ವ್ಯವಸ್ಥಾಪಕರು(ಐಬಿ) सहायक महा प्रबंधक (आई.बी.) Asst. Gen. Manager (IB)
Overseas Branch (06861), Bangalore-560 001
RENUKA.U.V
SS. No.: 4638
PF. No.: 6197345

ಭಾರತೀಯ ಸ್ಟೇಟ್ ಬ್ಯಾಂಕ್ ಪರವಾಗಿ कृते भारतीय स्टेट बैंक
For STATE BANK OF INDIA
ಸಹಾಯಕ ಪ್ರಧಾನ ವ್ಯವಸ್ಥಾಪಕರು(ಐಬಿ) सहायक महा प्रबंधक (आई.बी.) Asst. Gen. Manager (IB)
Overseas Branch (06861), Bangalore-560 001
THOMAS JACOB K.J.
SS. No. T-190
PF. No.: 7292732

COPY

0686125BG0B00481

2025-06-26

1 / 1

Tata Hitachi Construction Machinery Co. Pvt. Ltd.

12/08/25

Annexure- 1(b)

Security Deposit Bank Guarantees

Bank Guarantee No. : MD2518440001
Issue Date : 03.07.2025
Expiry Date : 31.07.2027
Claim Expiry Date : 31.07.2028

SECURITY DEPOSIT BANK GUARANTEE

TO,
M/S. COAL INDIA LIMITED,
COAL BHAWAN, PREMISES NO. 4,
ACTION AREA IA, NEW TOWN, RAJARHAT,
KOLKATA-700 156, INDIA.

RE: BANK GUARANTEE IN RESPECT OF NOTIFICATION OF AWARD VIDE NO. **CIL/C2D/20 CUM EHF SHOVEL/R-151/394/159 DATED 03.06.2025** BETWEEN **M/S. COAL INDIA LIMITED** AND **M/S HITACHI CONSTRUCTION MACHINERYCO., LTD., JAPAN.**

MESSERS **M/S HITACHI CONSTRUCTION MACHINERY CO., LTD.**, A COMPANY / FIRM HAVING ITS OFFICE AT NO. UENO EAST TOWER, 13TH FLOOR, 2-16-1, HIGASHIUENO, TAITO-KU, TOKYO - 110-0015, JAPAN (HEREINAFTER CALLED **'THE CONTRACTOR'**) HAS RECEIVED THENOTIFICATION OF AWARD / PURCHASE ORDER VIDE NO. **CIL/C2D/20 CUM EHF SHOVEL/R-151/394/159 DATED 03.06.2025** (HEREINAFTER CALLED **'THE SAID AGREEMENT'**) WITH **M/S. COAL INDIA LIMITED** (HEREINAFTER CALLED **'THE COMPANY'**) TO SUPPLY OF 2 NOS OF 20 CUM ELECTRIC HYDRAULIC FACE SHOVELS (MAKE - HITACHI, MODEL - EX3600E-6) STORES/ MATERIALS AMOUNTING TO **JPY 1,267,237,978 (JAPANESE YEN ONE BILLION TWO HUNDRED AND SIXTY SEVEN MILLION TWO HUNDRED AND THIRTY SEVEN THOUSAND NINE HUNDRED AND SEVENTY EIGHT ONLY)** ON THE TERMS AND CONDITIONS CONTAINED IN THE SAID NOTIFICATION OF AWARD/ PURCHASE ORDER.

SUMITOMO MITSUI BANKING CORPORATION, A BANK CONSTITUTED/REGISTERED UNDER THE LAWS OF JAPAN AND HAVING ITSHEAD OFFICE AT 1-1-2, MARUNOUCHI, CHIYODA-KU, TOKYO 100 0005, JAPAN AND BRANCH OFFICE IN INDIA AMONGST OTHERS AT 2ND FLOOR, WORLDMARK 3, HOSPITALITY DISTRICT, AEROCITY, NEW DELHI-110037, INDIA (HEREINAFTER CALLED **'THE BANK'**) HAS AT THE REQUEST OF THE CONTRACTOR AGREED TO GIVE THE GUARANTEE AS HEREINAFTER CONTAINED.

Name of bank

WE THE BANK DO HEREBY UNCONDITIONALLY AGREE WITH THE COMPANY THAT IF THE CONTRACTOR SHALL IN ANY WAY FAIL TO OBSERVE OR PERFORM THE TERMS AND CONDITIONS OF THE SAID AGREEMENT OR SHALL COMMIT ANY BREACH OF ITS OBLIGATIONS THERE UNDER, THE BANK SHALL ON DEMAND AND WITHOUT ANY OBJECTION OR DEMUR PAY TO THE COMPANY, THE SAID SUM OF **JPY 63,361,899 (JAPANESE YEN SIXTY THREE MILLION THREE HUNDRED AND SIXTY ONE THOUSAND EIGHT HUNDRED NINETY NINE ONLY)**/OR ANY PORTION THERE OF WITHOUT REQUIRING THE COMPANY TO HAVE RECOURSE TO ANY LEGAL REMEDY THAT MAY BE AVAILABLE TO IT TO COMPEL THE BANK TO PAY THE SAME OR CALLING ON THE COMPANY TO COMPEL SUCH PAYMENT BY THE CONTRACTOR.

For SUMITOMO MITSUI BANKING CORPORATION
Authorised Signatory

SUMITOMO MITSUI BANKING CORPORATION ★ NEW DELHI ★ SMBC 03

For SUMITOMO MITSUI BANKING CORPORATION
Authorised Signatory

Page 2 of 4

Tata Hitachi Construction Machinery Co. Pvt. Ltd.

Bank Guarantee No. : MD2518440001
Issue Date : 03.07.2025
Expiry Date : 31.07.2027
Claim Expiry Date : 31.07.2028

ANY SUCH DEMAND SHALL BE CONCLUSIVE AS REGARDS THE LIABILITY OF THE CONTRACTOR TO THE COMPANY AND AS REGARDS THE AMOUNT PAYABLE BY THE BANK UNDER THIS GUARANTEE. THE BANK SHALL NOT BE ENTITLED TO WITHHOLD PAYMENT ON THE GROUND THAT THE CONTRACTOR HAS DISPUTED ITS LIABILITY TO PAY OR HAS DISPUTED THE QUANTUM OF THE AMOUNT OR THAT ANY ARBITRATION PROCEEDING OR LEGAL PROCEEDING IS PENDING BETWEEN THE COMPANY AND THE CONTRACTOR REGARDING THE CLAIM.

WE, THE BANK, FURTHER AGREE THAT THE GUARANTEE SHALL COME INTO FORCE FROM THE DATE HEREOF AND SHALL REMAIN IN FULL FORCE AND EFFECT TILL THE PERIOD THAT WILL BE TAKEN FOR THE PERFORMANCE OF THE SAID AGREEMENT WHICH IS LIKELY TO BE THE **31ST DAY OF JULY 2027** BUT IF THE PERIOD OF AGREEMENT IS EXTENDED EITHER PURSUANT TO THE PROVISIONS IN THE SAID AGREEMENT OR BY MUTUAL AGREEMENT BETWEEN THE CONTRACTOR AND THE COMPANY, THE BANK SHALL RENEW THE PERIOD OF THE GUARANTEE FAILING WHICH IT SHALL PAY TO THE COMPANYTHE SAID SUM OF **JPY 63,361,899 (JAPANESE YEN SIXTY THREE MILLION THREE HUNDRED AND SIXTY ONE THOUSAND EIGHT HUNDRED NINETY NINE ONLY)** OR SUCH LESSER AMOUNT OUT OF THE SAID SUM OF **JPY 63,361,899(JAPANESE YEN SIXTY THREE MILLION THREE HUNDRED AND SIXTY ONE THOUSAND EIGHT HUNDRED NINETY NINE ONLY)** AS MAYBE DUE TO THE COMPANY AND AS THE COMPANY MAY DEMAND. THIS GUARANTEE SHALL REMAIN IN FORCE UNTIL THE DUES OF THE COMPANY IN RESPECT OF THE SAID SUM OF **JPY 63,361,899 (JAPANESE YEN SIXTY THREE MILLION THREE HUNDRED AND SIXTY ONE THOUSAND EIGHT HUNDRED NINETY NINE ONLY)** ARE FULLY SATISFIED AND THE COMPANY CERTIFIES THAT THE AGREEMENT HAS BEEN FULLY CARRIED OUT BY THE CONTRACTOR AND DISCHARGES THE GUARANTEE.

THE BANK FURTHER AGREES WITH THE COMPANY THAT THE COMPANY SHALL HAVE THE FULLEST LIBERTY WITHOUT THE CONSENT OF THE BANK AND WITHOUT AFFECTING IN ANY WAY THE OBLIGATIONS HEREUNDER TO VARY ANY OF THE TERMS AND CONDITIONS OF THE SAID AGREEMENT OR TO EXTEND THE TIME FOR PERFORMANCE OF THE SAID AGREEMENT FROM TIME TO TIME OR TO POSTPONE FOR ANY TIME OR FROM TIME TO TIME ANY OF THE POWERS EXERCISABLE BY THE COMPANY AGAINST THE CONTRACTOR ANDTO FORBEAR TO ENFORCE ANY OF THE TERMS AND CONDITIONS RELATING TO THE SAID AGREEMENT AND THE BANK SHALL NOT BE RELIEVED FROM ITS LIABILITY BY REASON OF SUCH FAILURE OR EXTENSION BEING GRANTED TO THE CONTRACTOR OR THROUGH ANY FORBEARANCE, ACT OR OMISSION ON THE PART OF THE COMPANY OR ANY INDULGENCE BY THE COMPANY TO THE CONTRACTOR OR ANY OTHER MATTER OR THING WHATSOEVER WHICH UNDER THE LAW RELATING TO SURETIES WOULD BUT FOR THIS PROVISIONS HAVE THE EFFECT OF RELIEVING OR DISCHARGING THE GUARANTOR.

For SUMITOMO MITSUI BANKING CORPORATION

Authorised Signatory

For SUMITOMO MITSUI BANKING CORPORATION

SUMITOMO MITSUI BANKING CORPORATION ★NEW DELHI★ SMBC 03

Authorised Signatory

Page 3 of 4

Tata Hitachi Construction Machinery Co. Pvt. Ltd.

12/08/25

Bank Guarantee No. : MD2518440001
Issue Date : 03.07.2025
Expiry Date : 31.07.2027
Claim Expiry Date : 31.07.2028

THE BANK FURTHER AGREES THAT IN CASE THIS GUARANTEE IS REQUIRED FOR A LONGER PERIOD AND IT IS NOT EXTENDED BY THE BANK BEYOND THE PERIOD SPECIFIED ABOVE, THE BANK SHALL PAY TO THE COMPANY THE SAID SUM OF **JPY 63,361,899 (JAPANESE YEN SIXTY THREE MILLION THREE HUNDRED AND SIXTY ONE THOUSAND EIGHT HUNDRED NINETY NINE ONLY)** OR SUCH LESSER SUM AS MAY THEN BE DUE TO THE COMPANY AND AS THE COMPANY MAY REQUIRE.

NOTWITHSTANDING ANYTHING HEREIN CONTAINED THE LIABILITY OF THE BANK UNDER THIS GUARANTEE IS RESTRICTED TO **JPY 63,361,899 (JAPANESE YEN SIXTY THREE MILLION THREE HUNDRED AND SIXTY ONE THOUSAND EIGHT HUNDRED NINETY NINE ONLY).** THE GUARANTEE SHALL REMAIN IN FORCE TILL THE **31ST DAY OF JULY 2027** AND UNLESS THE GUARANTEE IS RENEWED OR A CLAIM IS PREFERRED AGAINST THE BANK WITHIN THE VALIDITY PERIOD AND/OR THE CLAIM PERIOD FROM THE SAID DATE (I.E. **31ST DAY OF JULY 2028**), ALL RIGHTS OF THE COMPANY UNDER THIS GUARANTEE SHALL CEASE AND THE BANK SHALL BE RELEASED AND DISCHARGED FROM ALL LIABILITY HEREUNDER EXCEPT AS PROVIDED IN THE PRECEDING CLAUSE.

THE BANK HAS UNDER ITS CONSTITUTION POWER TO GIVE THIS GUARANTEE AND **MS RASHMI CHAWLA AND MR VIMAL DWIVEDI** ((NAME OF THE PERSON(S)) WHO HAVE SIGNED IT ON BEHALF OF THE BANK) HAS AUTHORITY TO DO SO.

THIS BANK GUARANTEE CONFIRMATION MESSAGE IS TO BE TRANSMITTED BY THE ISSUING BANK THROUGH SFMS TO (**ICIC0000006**); MESSAGE TYPE: IFN 760COV.

DATED THIS 03RD DAY OF JULY 2025
PLACE: NEW DELHI

Rashmi Chawla
Assistant Vice President
Employee Code - 10020
Sumitomo Mitsui Banking Corporation
New Delhi Branch

SUMITOMO MITSUI BANKING CORPORATION ★ NEW DELHI ★ SMBC 03

Vimal Dwivedi
Assistant Vice President
Employee Code - 10339
Sumitomo Mitsui Banking Corporation
New Delhi Branch

Tata Hitachi Construction Machinery Co. Pvt. Ltd.

12/08/25

Annexure- 2

Performance Bank Guarantee Format

…… (Name & address of the concerned subsidiary
…… Company / Purchaser Company)

Re: Bank Guarantee in respect of Agreement / Contract vide no. ….. dated ..... between Coal India Ltd. on behalf of …… (Name of concerned subsidiary Company) and …….. (Name of Supplier Company) ***{applicable for CIL Contracts}***

Or

Re: Bank Guarantee in respect of Agreement / Contract / Purchase Order vide no. ….. dated ..... between…… (Name of Purchaser Company) and …….. (Name of Supplier Company) ***{applicable for subsidiary contracts/Purchase Orders}***

Messers .....a Company / Firm having its office at No. ..... (hereinafter called 'the Contractor') has entered into the Agreement / Contract / Purchase Order vide no ……. dated …… (hereinafter called 'the said Agreement')with Coal India Limited, Kolkata on behalf of …… / Purchaser Company (Name of the concerned subsidiary Company) (hereinafter called 'the Company') to supply …… stores/ materials amounting to Rs. ……on the terms and conditions contained in the said Agreement.

The…..... (Name of the Bank) (hereinafter called 'the Bank') having its office at..... has at the request of the Contractor agreed to give the guarantee as hereinafter contained.

We.....(Name of the Bank) do hereby unconditionally agree with the Company that if the Contractor shall in any way fail to observe or perform the terms and conditions of the said Agreement or shall commit any breach of its obligations thereunder, the Bank shall on demand and without any objection or demur pay to the Company, the said sum of Rs……. or any portion thereof without requiring the Company to have recourse to any legal remedy that may be available to it to compel the Bank to pay the same or calling on the Company to compel such payment by the Contractor.

Any such demand shall be conclusive as regards the liability of the Contractor to the Company and as regards the amount payable by the Bank under this guarantee. The Bank shall not be entitled to withhold payment on the ground that the Contractor has disputed its liability to pay or has disputed the quantum of the amount or that any arbitration proceeding or legal proceeding is pending between the Company and the Contractor regarding the claim.

We, the Bank, further agree that the guarantee shall come into force from the date hereof and shall remain in full force and effect till the period that will be taken for the performance of the said Agreement which is likely to be the …….. day of…… but if the period of Agreement is extended either pursuant to the provisions in the said Agreement or by mutual agreement between the Contractor and the Company, the Bank shall renew the period of the guarantee failing which it shall pay to the Company the said sum of Rs……, or such lesser amount out of the said sum of Rs……..as maybe due to the Company and as the Company may demand. This guarantee shall remain in force until the dues of the Company in respect of the

Tata Hitachi Construction Machinery Co. Pvt. Ltd.

said sum of Rs..... are fully satisfied and the Company certifies that the Agreement has been fully carried out by the contractor and discharges the guarantee.

The Bank further agrees with the Company that the Company shall have the fullest liberty without the consent of the Bank and without affecting in any way the obligations hereunder to vary any of the terms and conditions of the said Agreement or to extend the time for performance of the said Agreement from time to time or to postpone for any time or from time to time any of the powers exercisable by the Company against the contractor and to forbear to enforce any of the terms and conditions relating to the said Agreement and the Bank shall not be relieved from its liability by reason of such failure or extension being granted to the contractor or through any forbearance, act or omission on the part of the Company or any indulgence by the Company to the contractor or any other matter or thing whatsoever which under the law relating to sureties would but for this provisions have the effect of relieving or discharging the Guarantor.

The Bank further agrees that in case this guarantee is required for a longer period and it is not extended by the Bank beyond the period specified above, the Bank shall pay to the Company the said sum of Rs..... or such lesser sum as may then be due to the Company and as the Company may require.

Notwithstanding anything herein contained the liability of the Bank under this guarantee is restricted to Rs.....only. The guarantee shall remain in force till the.....day of .....20... and unless the guarantee is renewed or a claim is preferred against the Bank within the validity period and/or the claim period from the said date, all rights of the Company under this guarantee shall cease and the Bank shall be released and discharged from all liability hereunder except as provided in the preceding clause.

The Bank has under its constitution power to give this guarantee and..... [(Name of the person(s)] who have signed it on behalf of the Bank has authority to do so.

Dated this.....day of .....20.....
Place.....

Signature of the authorized person(s)
For and on behalf of the Bank.

Hitachi Construction Machinery Co. Pvt. Ltd.

Annexure- 3

Pro-forma of Commissioning Certificate to be issued by the Purchaser after Successful Commissioning of Equipment

Ref. No.:
Date:

M/s .....
.....
.....

Sub: Certificate of Commissioning of Equipment

1. This is to certify that the equipment as detailed below has been received in good condition along with all the standard and special accessories in accordance with the Contract / specifications. The same has been installed and commissioned as detailed below:

   (a) Contact No._____ Date_____

   (b) Description and Model of the Equipment _____

   (c) Details of Commissioning:

Manufacturer's Equipment Sl. No.	Date of Commissioning (date/month/year) (DD/MM/YYYY)

   (d) Bill of Lading No. & Date _____
   (for imported contract)

   (e) Name of the Vessel / Transporter _____

   (f) R/ R Consignment Note/ Challan No. _____
   Date_____

   (g) Date of receipt of last consignment of equipment _____

   (h) Name of the Project _____
   (i) Name of the Consignee _____

2. Details of Accessories not yet supplied and recoveries to be made on that account :

Tata Hitachi Construction Machinery Co. Pvt. Ltd.

Sl. No.	Description	Amount to be recovered

3. The proving test has been done to our entire satisfaction and operators have been trained to operate the equipment.

4. The supplier has fulfilled his contractual obligations for successful commissioning satisfactorily:

   Or

   The supplier has failed to fulfil his contractual obligations with regard to the following:
   (a)
   (b)
   (c)
   (d)

5. The amount of recovery on account of non-supply of accessories and spares is given under paragraph number 2.

6. The amount of recovery on account of failure of the Supplier to meet his contractual obligations is as indicated in endorsement of the letter.

Signature (s)

Name(s)

Designation(s) with Stamp

Explanatory notes for filling up the commissioning certificate by the Purchaser

(a) He has adhered to the time schedule specified in the contract in dispatching the documents / drawings pursuant to Technical Specifications.
(b) He has supervised the commissioning of the plant in time, i.e. within the period specified in the Contract from the date of intimation by the Purchaser in respect of the installation of the plant.

The commissioning certificate shall be signed by the concerned officials of the Project and counter-signed by the Area General Manager and HOD of Excavation Deptt. of subsidiary company.

In the event of documents / drawings having not been supplied or installation and commissioning of the equipment having been delayed on account of the Supplier, the extent of delay should always be mentioned.

Tata Hitachi Construction Machinery Co. Pvt. Ltd.

BANK DETAILS (Annexure – 4)

BANK DETAILS OF M/S HITACHI CONSTRUCTION MACHINERY CO., LTD.,

Name of the Bank and address	MUFG Bank, Ltd. 1-4-1, Marunouchi, Chiyoda-ku, Tokyo, 100-0005, Japan, 03-5252-111
Branch Name	Tokyo Main Office
Bank Account Number	0175952(JPY)
IFSC Code No./Swift Code of the Bank	BOTKJPJT

BANK DETAILS OF M/S TATA HITACHI CONSTRUCTION MACHINERY COMPANY PRIVATE LIMITED

Name of the Bank and address	HDFC Bank, 24-3, HDFC House, No.51, Kasturba Road, Bangalore - 560001
Branch Name	Kasturba Road
Bank Account Number	00090110000132
IFSC Code No./Swift Code of the Bank	HDFC0000009

Tata Hitachi Construction Machinery Co. Pvt. Ltd.

12/08/25

(Annexure – 5)

Format for 'No Claim / No Dispute Certificate' to be issued by Supplier

(On company letterhead)

To

..... (Name & address of the concerned subsidiary
..... Company / Purchaser Company)

NO CLAIM / NO DISPUTE CERTIFICATE

Sub: **Contract no. ---------- dated ----------for the supply of ---------- to Subsidiaries of CIL**

We have received the full and final settlement of all the payments due to us from _____ (Name of CIL's Subsidiary) for the supply of _____Equipment Sl no.____ under the abovementioned contract, between CIL & us. We hereby unconditionally and without any reservation whatsoever, certify that, we shall have no claim whatsoever, of any description, on any account, against _____ (Name of CIL's Subsidiary), against aforesaid contract executed by us other than PBG for Equipment Sl no._____. We further declare unequivocally, that we have received all the amounts payable to us from _____ (Name of CIL's Subsidiary), and have no dispute of any description whatsoever, regarding the amounts worked out as payable to us and received by us, and that we shall continue to be bound by the terms and conditions of the contract, as regards performance of the contract.

Yours faithfully,
Signatures of supplier or
officer authorised to sign the contract documents
on behalf of the supplier
(Company stamp)

Date:_____
Place:_____

Tata Hitachi Construction Machinery Co. Pvt. Ltd.

12/08/25

Annexures to Technical Specifications
(Annexure a to u)

TATA HITACHI

CHALO DESH BANAYE

Reliable solutions

Ref: THCM/CIL/20CuM EHFS/FY2324/Tools/01
Date: 28-12-2023

To
M/s. Coal India Limited,
Coal Bhawan
Premises No. 4,
Action Area IA, New Town, Rajarhat,
Kolkata-700 156, India.

Dear Sir,

Sub: Undertaking - Listed tools

Sec-VI, Tech Specs, Part D, Clause – D.10.1, General (b).

Ref: Tender Number: CIL/C2D/20 Cum EHF Shovel/R-151/394 Date: 02.11.2023

We would like to confirm that the listed tools shall be sufficient for the purpose and if any additional tool is required, that shall be provided as per requirement.

Thanking you,

Yours Sincerely,

For Tata Hitachi Construction Machinery Company Private Limited

Authorized signatory

Tata Hitachi Construction Machinery Co. Pvt. Ltd.

421A

工具
TOOLS

適用号機 001001-
Serial No.

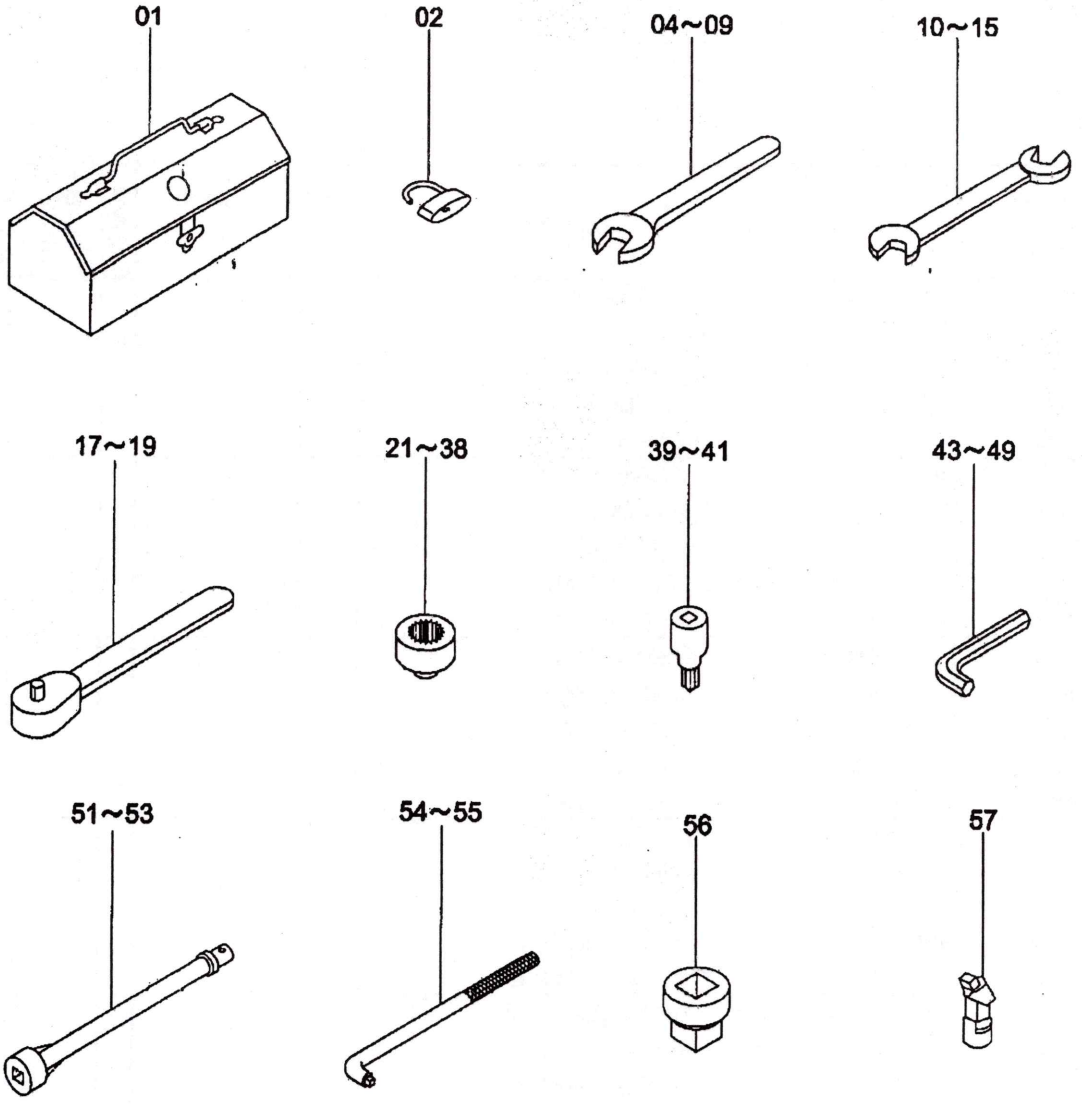

9197878

P18U-EL1-1

工具
TOOLS

適用号機 001001-
Serial No.

符号 ITEM	部品番号 PART NO.	部品名	PART NAME	数量 Q'TY	サービスコード S.C	適用号機 SERIAL NO.	互換性 ICA	代替部品 REPLACEABLE PART 部品番号 PART NO.	代替部品 REPLACEABLE PART 数量 Q'TY
01	934787	ﾎﾞｯｸｽ;ﾂｰﾙ	BOX;TOOL	1					
02	990878	ｷｰ	KEY	1					
04	989861	ｽﾊﾟﾅ 36	SPANNER 36	1					
05	934574	ｽﾊﾟﾅ 41	SPANNER 41	1					
06	934575	ｽﾊﾟﾅ 46	SPANNER 46	1					
07	927507	ｽﾊﾟﾅ 50	SPANNER 50	1					
08	4087666	ｽﾊﾟﾅ 70	SPANNER 70	1					
09	4099634	ｽﾊﾟﾅ 85	SPANNER 85	1					
10	D99053	ｽﾊﾟﾅ 10X12	SPANNER 10X12	1					
11	989857	ｽﾊﾟﾅ 13X17	SPANNER 13X17	1					
12	D99054	ｽﾊﾟﾅ 14X17	SPANNER 14X17	1					
13	989858	ｽﾊﾟﾅ 19X22	SPANNER 19X22	1					
14	989859	ｽﾊﾟﾅ 24X27	SPANNER 24X27	1					
15	989860	ｽﾊﾟﾅ 30X32	SPANNER 30X32	1					
17	985706	ﾊﾝﾄﾞﾙ;ﾗﾁｴｯﾄ 12.7	HANDLE;RATCHET 12.7	1					
18	944545	ﾊﾝﾄﾞﾙ;ﾗﾁｴｯﾄ 19.0	HANDLE;RATCHET 19.0	1					
19	4504952	ﾊﾝﾄﾞﾙ;ﾗﾁｴｯﾄ 25.4	HANDLE;RATCHET 25.4	1					
21	4059865	ﾚﾝﾁ;ｿｹｯﾄ 10	WRENCH;SOCKET 10	1					
22	4448780	ﾚﾝﾁ;ｿｹｯﾄ 12	WRENCH;SOCKET 12	1					
23	D912627	ﾚﾝﾁ;ｿｹｯﾄ 13	WRENCH;SOCKET 13	1					
24	4448728	ﾚﾝﾁ;ｿｹｯﾄ 14	WRENCH;SOCKET 14	1					
25	D99055	ﾚﾝﾁ;ｿｹｯﾄ 17	WRENCH;SOCKET 17	1					
26	D99056	ﾚﾝﾁ;ｿｹｯﾄ 19	WRENCH;SOCKET 19	1					
27	989848	ﾚﾝﾁ;ｿｹｯﾄ 22	WRENCH;SOCKET 22	1					
28	D99062	ﾚﾝﾁ;ｿｹｯﾄ 23	WRENCH;SOCKET 23	1					
29	989849	ﾚﾝﾁ;ｿｹｯﾄ 24	WRENCH;SOCKET 24	1					
30	989850	ﾚﾝﾁ;ｿｹｯﾄ 27	WRENCH;SOCKET 27	1					
31	4009865	ﾚﾝﾁ;ｿｹｯﾄ 30	WRENCH;SOCKET 30	1					
32	947309	ﾚﾝﾁ;ｿｹｯﾄ 32	WRENCH;SOCKET 32	1					
33	989853	ﾚﾝﾁ;ｿｹｯﾄ 36	WRENCH;SOCKET 36	1					
34	947310	ﾚﾝﾁ;ｿｹｯﾄ 41	WRENCH;SOCKET 41	1					
35	4369982	ﾚﾝﾁ;ｿｹｯﾄ 46	WRENCH;SOCKET 46	1					
36	4370361	ﾚﾝﾁ;ｿｹｯﾄ 50	WRENCH;SOCKET 50	1					
37	4087668	ｿｹｯﾄ 70	SOCKET 70	1					
38	4236077	ﾚﾝﾁ;ｿｹｯﾄ 85	WRENCH;SOCKET 85	1					
39	4093794	ﾚﾝﾁ;ｿｹｯﾄ 17	WRENCH;SOCKET 17	1					
40	4093795	ﾚﾝﾁ;ｿｹｯﾄ 19	WRENCH;SOCKET 19	1					
41	4093796	ﾚﾝﾁ;ｿｹｯﾄ 22	WRENCH;SOCKET 22	1					
43	985709	ﾚﾝﾁ;ﾊﾞｰ 5.0	WRENCH;BAR 5.0	1					
44	985710	ﾚﾝﾁ;ﾊﾞｰ 6.0	WRENCH;BAR 6.0	1					

421B

工具
TOOLS

適用号機 001001-
Serial No.

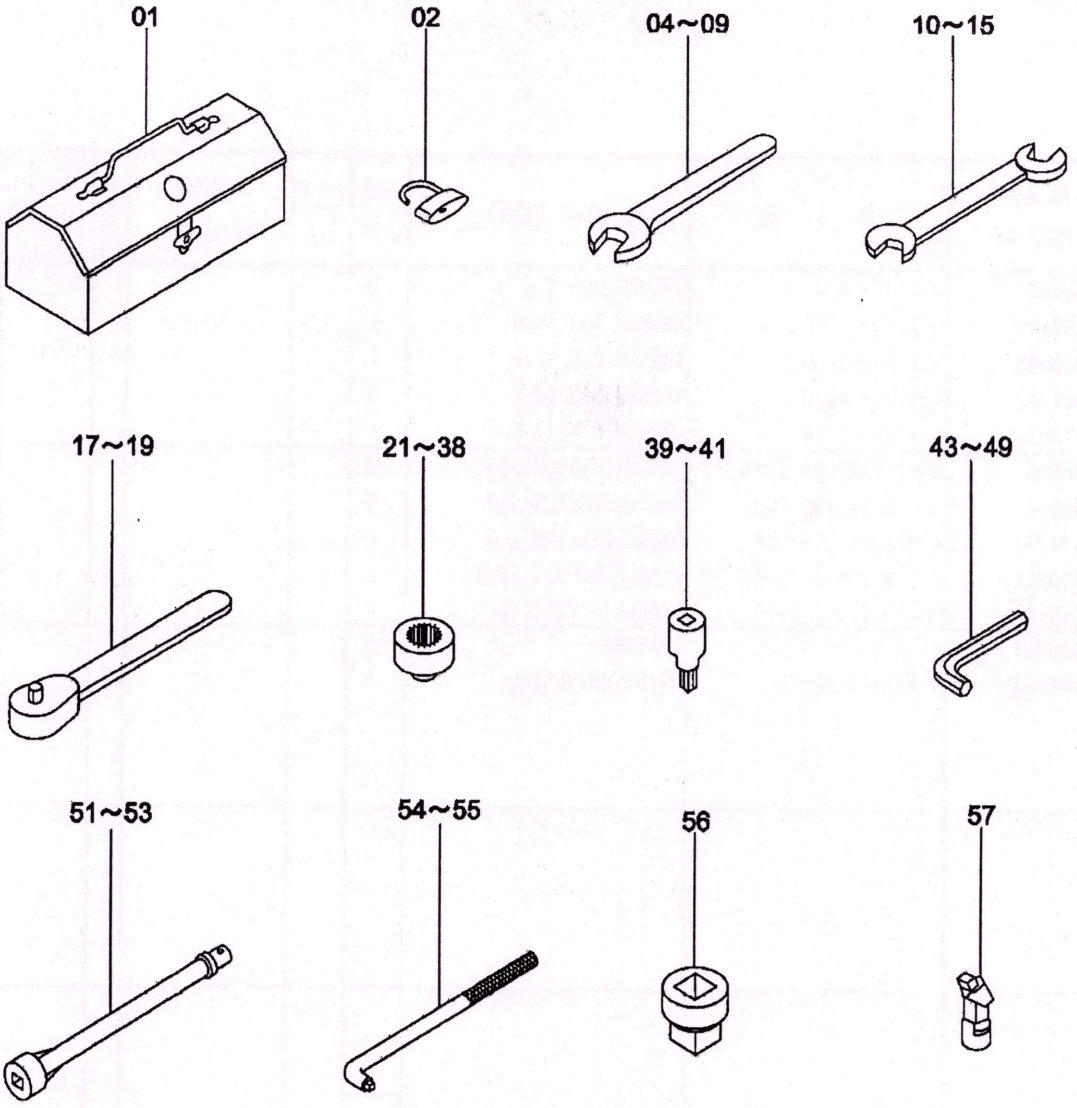

9197878

422B

工具
TOOLS

適用号機 001001-
Serial No.

符号 ITEM	部品番号 PART NO.	部品名	PART NAME	数量 Q'TY	サービスコード S.C	適用号機 SERIAL NO.	互換性 ICA	代替部品 REPLACEABLE PART 部品番号 PART NO.	代替部品 REPLACEABLE PART 数量 Q'TY
45	958393	レンチ;バー 8.0	WRENCH;BAR 8.0	1					
46	958394	レンチ;バー 10.0	WRENCH;BAR 10.0	1					
47	4045580	レンチ;バー 12.0	WRENCH;BAR 12.0	1					
48	4004229	レンチ;バー 14.0	WRENCH;BAR 14.0	1					
49	4013974	レンチ;バー 17.0	WRENCH;BAR 17.0	1					
51	936010	バー;エクステンション 250	BAR;EXTENSION 250	2					
52	939624	バー;エクステンション 200	BAR;EXTENSION 200	2					
53	4514777	バー;エクステンション 400	BAR;EXTENSION 400	1					
54	4505981	ハンドル;オフセット 25.4	HANDLE;OFFSET 25.4	1					
55	4093797	ハンドル;オフセット 38.1	HANDLE;OFFSET 38.1	1					
56	4416263	アダプタ	ADAPTER	1					
57	4504953	ジョイント;ユニバーサル	JOINT;UNIVERSAL	1					

Clarification against the shortfall sl. no 08 (i & ii) and 10 (i) (Technical) – Details of major bought-out assemblies and sub-assemblies - Section VI – Technical Specifications D.10.2 (k)

Tender No. CIL/C2D/20 Cum EHF Shovel/R-151/394 Date: 02.11.2023			
As per Part D Equipment Specification Clause No D.10.2 Technical Details (k)			
Details of Major Bought Out items of Hitachi EX3600E-6 Hydraulic Excavator			
S No	**Component Name**	**Current make of component**	**Place**
1	Main Pump	Kawasaki Heavy Industries Ltd	Japan
2	Main Control Valve	Kayaba Industries Ltd.	Japan
3	Pilot Pump	Kayaba Industries Ltd.	Japan
4	Pilot Control Valve	Kayaba Industries Ltd.	Japan
5	Oil Cooler	T.RAD Radiator Co, Japan	Japan
6	Swing Motor	Kawasaki Heavy Industries Ltd	Japan
7	Travel Motor	Kawasaki Heavy Industries Ltd	Japan
8	Hydraulic Cylinders: Boom, Arm and Bucket	Kayaba Industries Ltd/ HITACHI	Japan
9	Track Link Assly with Shoes	Topy/ITM/ HITACHI	Japan
10	Lower Rollers	ITM/ HITACHI	Japan
11	Upper Rollers	ITM/ HITACHI	Japan
12	Air Conditioner in Cabin	SANDEN	Japan
13	Automatic centralised lubrication system	Lincoln	Japan
14	Automatic fire supression system	Associated Engineers/Ansul/ Southern electronics	India
15	Fire extinguisher	Minimax /Associated Engineers/Ansul/ Southern electronics/CEASE Fire	India
16	Field Switch	Mine Line Pvt Ltd/Electroteknica Engineering Pvt. Ltd.	India
17	Capacitor Bank	Mine Line Pvt Ltd/Prayaas Automation	India
18	Trailing Cable (300 Mt.)	Apar Industries Limited	India
19	Isolator switch	Pioneer Enterprises/A-BOND STRANDS PVT. LTD	India
20	Operator Fatigue Monitoring system	My Port Services India Pvt Ltd/Automation Controls	India

Note : For above Sl no 8,9,10,11 items, Hitachi Construction Machinery Co., Ltd has a design for manufacturing the undercarriage parts and cylinder parts which is manufactured within the company or sourced from third party depending on the quantity required.

Tender Number: CIL/C2D/20 Cum EHF Shovel/R-151/394 Date: 02.11.2023

Detailed schedule of all necessary oils, lubricants, fluids for the operation and maintenance of the equipment indicating the estimated annual consumption and specifying the appropriate international standard number or the name and the reference number of an equivalent available in India considered to be acceptable by the supplier, duly signed and stamped. - Sec-VI, Tech Specs, Part C, Clause-C.6.4

Sl. No.	COMPARTMENT	QTY	UNIT	GRADE	REPLACEMENT INTERVAL (HRS)	Annual Consumption considering 5500 working Hours	Recommended Lubricants used in equipment	Recommended Lubricants supplied by different supplier
							Tata Hitachi	TOTAL Lubricants & Valvoline
1	ENGINE OIL FOR PUMP TRANSMISSION*	62	Litres	SAE 15W40 CI4+	500	744	TATA HITACHI PREMIUM HD	Valvoline - Duralife TH Plus Engine oil
2	GEAR OIL FOR SWING DEVICE**	75 X 4	Litres	SAE 90EP APIGL5	1000	1800	Tata Hitachi TG90 Gear Oil	TOTAL Lubricant : TRANS AXLE TH 80W-90
3	GEAR OIL FOR TRAVEL DEVICE ***	220 X 2	Litres	SAE 90EP APIGL5	2000	1320	Tata Hitachi TG90 Gear Oil	TOTAL Lubricant : TRANS AXLE TH 80W-90
4	HYDRAULIC OIL- LONG DRAIN OIL	4000	Litres	HN46	4000	4000	Tata Hitachi Genuine Hydraulic Oil Super EX46HN	Not Available
5	GREASE FOR MAIN MOTOR BEARING	0.2	Kgs	Bearing Grease	1500 Hours or at 2& half months	0.6		Mobil Polyrex EM
6	GREASE FOR SWING BEARING	350	Kgs	NLGI-2 EP Type	2000	700	Tata Hitachi Heavy Duty EP-2 Grease	TOTAL Lubricant : MULTIS TH EP 2 Valvoline - Premium TH Grease
7	GREASE FOR AUTO LUBRICATION	1.2	Kgs	NLGI-2 EP Type	1	6600	Tata Hitachi Heavy Duty EP-2 Grease	TOTAL Lubricant : MULTIS TH EP 2 Valvoline - Premium TH Grease

Note:-

*,** - FIRST TIME REPLACEMENT INTERVAL IS 50 HOURS

***- FIRST TIME REPLACEMENT INTERVAL IS 500 HOURS

CIL/C2D/20 Cum EHF Shovel/R-151/394 Date: 02.11.2023

Quality assurance plan for various stages of manufacture complying with an Internationally recognized quality assurance standard such as ISO 9000 or its equivalent - Sec-VI, Tech Specs, Part C, Clause-C.10.1

QUALITY ASSURANCE PLAN/ EX3600E-6 Hydraulic Excavator

S.No.	COMPONENTS/ PARAMETER	SPECIFICATION / MAKE	METHOD OF CHECKS	ACCEPTANCE CRITERIA	RECORD FORMAT	REMARKS
1	**Electrical Motor**					
a	Rating	1200Kw AC 6000 to 6600V/50Hz Hitachi	Test Certificate	Manufacturers/ Hitachi Test Certificate	Manufacturers/ Hitachi Test Certificate	
b	Rated Current	124A @ 6600V	Test Certificate	Manufacturers/ Hitachi Test Certificate	Manufacturers/ Hitachi Test Certificate	
2	**Fabrication Parts/Assy.**					
a.	Main Frame; upper	As per Check Sheet	UT,Visual,Self-Check Hitachi /Telcon	Based on Check	MHF	
b.	Main Frame; Lower	As per Check Sheet	UT,Visual,Self-Check Hitachi /Telcon	Based on Check	MHF	
c.	Side Frame RH & LH	As per Check Sheet	UT,Visual,Self-Check Hitachi /Telcon	Based on Check	MHF	
d.	Boom	As per Check Sheet	UT,Visual,Self-Check Hitachi /Telcon	Based on Check	MHF	
e.	Arm	As per Check Sheet	UT,Visual,Self-Check Hitachi /Telcon	Based on Check	MHF	
f.	Bucket	As per Check Sheet	UT,Visual,Self-Check Hitachi /Telcon	Based on Check	MHF	
3	**Bucket**					
I	Loader	21 cum	Dimension Check as per Bucket capacity chart	As per P.O.	MHF	
4	**Swing Transmission**					
a.	Swing Motor	Hitachi Specification	Hitachi Quality Assurance	Hitachi Acceptance	MHF	
b.	Swing Gear Box	Hitachi Specification	Hitachi Quality Assurance	Hitachi Acceptance	MHF	

Tata Hitachi Construction Machinery Co. Pvt. Ltd.

12/08/25

CHALO DESH BANAYE

CIL/C2D/20 Cum EHF Shovel/R-151/394 Date: 02.11.2023

Quality assurance plan for various stages of manufacture complying with an Internationally recognized quality assurance standard such as ISO 9000 or its equivalent - Sec-VI, Tech Specs, Part C, Clause-C.10.1

QUALITY ASSURANCE PLAN/ EX3600E-6 Hydraulic Excavator

S.No.	COMPONENTS/ PARAMETER	SPECIFICATION / MAKE	METHOD OF CHECKS	ACCEPTANCE CRITERIA	RECORD FORMAT	REMARKS
5	**Pump Transmission**					
a.	Pump	Hitachi Specification	Hitachi Quality Assurance	Hitachi Acceptance	MHF	
b.	Pump Gear Box	Hitachi Specification	Hitachi Quality Assurance	Hitachi Acceptance	MHF	
6	**Propel Transmission**					
a.	Propel Motor	Hitachi Specification	Hitachi Quality Assurance	Functions OK	MHF	
b.	Propel Gear Box	Hitachi Specification	Hitachi Quality Assurance	Functions OK	MHF	
7	**Control Valve & Hyd. System**	Hitachi Specification	Hitachi Quality Assurance	Functions OK	MHF	
8	**Hyd. Cylinders**	Hitachi Specification	Hitachi Quality Assurance	Functions OK	MHF	
9	**Electrical System**					
a.	Battery		Mfr Quality Assurance	Functions OK	MHF	Mfr's Warranty card given
b.	Alternator/ Self Starter		Mfr Quality Assurance	Functions OK	MHF	
c.	Lights		Hitachi Quality Assurance	Functions OK		
d	MCU	Dedicated computer	Hitachi Quality Assurance	Functions OK	Soft copy Format	
e.	Data Logger	Dedicated unit	Hitachi Quality Assurance	Functions OK	Soft copy Format	
10	**Paint Quality Check**					
I.	Visual Inspection	As per Check Sheet	Visual	Free of Defects	MHF	
II.	Gloss level	Min. 70 (at 60 deg.)	Actual measurement	Within Spec.	MHF	
III.	DFT	Min. 70 microns	Actual measurement	Within Spec.	MHF	
11	**Final Inspection**	As per Despatch Check List	Visual &	As per Spec.	MACHINE TEST CERTIFICATE	Machine Test Certificate

Tata Hitachi Construction Machinery Co. Pvt. Ltd.

CONSTRUCTION MACHINERY

CIL/C2D/20 Cum EHF Shovel/R-151/394 Date: 02.11.2023

Quality assurance plan for various stages of manufacture complying with an Internationally recognized quality assurance standard such as ISO 9000 or its equivalent - Sec-VI, Tech Specs, Part C, Clause-C.10.1

QUALITY ASSURANCE PLAN/ EX3600E-6 Hydraulic Excavator

S.No.	COMPONENTS/ PARAMETER	SPECIFICATION / MAKE	METHOD OF CHECKS	ACCEPTANCE CRITERIA	RECORD FORMAT	REMARKS
12	Onsite Inspection after assembly					
12.1	ELECTRIC MOTOR RPM					
I.	Synchronous RPM	1500min-1	Actual Test Run	Within Spec.	MHF	
12.2	Travel Speed (Sec/ 20M)					
I.	Fast Mode	35 +/- 2 Sec for 20 m	Actual Test Run	Within Spec.	MHF	
II.	Slow Mode	46 +/- 3 Sec for 20 m	Actual Test Run	Within Spec.	MHF	
12.3	Track Revolution (in sec for 3 rev))					
I.	Fast Speed Mode.	97.0 +/-5	Actual Test Run	Within Spec.	MHF	
vi.	Slow Speed Mode	130.0 +/-6	Actual Test Run	Within Spec.	MHF	
12.4	Attachment Speed (in sec.)					
I.	Boom Up	8.2+/-0.5(L)	Actual Test Run	Within Spec.	MHF	
ii.	Boom Lower	6.3+/-0.5(L)	Actual Test Run	Within Spec.	MHF	
iii.	Arm In	7.6+/-0.5(L)	Actual Test Run	Within Spec.	MHF	

Tata Hitachi Construction Machinery Co. Pvt. Ltd.

12/08/25

CIL/C2D/20 Cum EHF Shovel/R-151/394 Date: 02.11.2023

Quality assurance plan for various stages of manufacture complying with an Internationally recognized quality assurance standard such as ISO 9000 or its equivalent - Sec-VI, Tech Specs, Part C, Clause-C.10.1

QUALITY ASSURANCE PLAN/ EX3600E-6 Hydraulic Excavator

S.No.	COMPONENTS/ PARAMETER	SPECIFICATION / MAKE	METHOD OF CHECKS	ACCEPTANCE CRITERIA	RECORD FORMAT	REMARKS
iv.	Arm out	7.1+/-0.5(L)	Actual Test Run	Within Spec.	MHF	
v.	Bucket In	5.1+/-0.5(L)	Actual Test Run	Within Spec.	MHF	
vi.	Bucket out	4.3+/-0.5(L);	Actual Test Run	Within Spec.	MHF	
vii.	Bucket Open	1.8+/-0.3(L)	Actual Test Run	Within Spec.	MHF	
viii.	Bucket Close	2.5+/-0.3L)	Actual Test Run	Within Spec.	MHF	
12.5	Swing Speed (for 3 rev in Sec.)					
I.	LHS	62 +/-3 Sec.	Actual Test Run	Within Spec.	MHF	
ii.	RHS	62 +/-3 Sec.	Actual Test Run	Within Spec.	MHF	
12.6	Pressure measurement					
	(Kg/Sq. Cm)					
I.	Main Relief	320 +/-10	Actual Measurement	Within Spec.	MHF	
ii.	Boom Up Full Presure./Relief P	320 +/-10	Actual Measurement	Within Spec.	MHF	
iii.	Boom Lower F.P./RP	320 +/-10	Actual Measurement	Within Spec.	MHF	
iv.	Arm In F.P./R.P.	320 +/-10	Actual Measurement	Within Spec.	MHF	
v.	Arm Out F.P./RP	320 +/-10	Actual Measurement	Within Spec.	MHF	
vi.	Bucket In F.P.	320 +/-10	Actual Measurement	Within Spec.	MHF	
vii.	Bucket out F.P.	320 +/-10	Actual Measurement	Within Spec.	MHF	
viii.	Swing Relief R.P.	320 +/-10	Actual Measurement	Within Spec.	MHF	
ix.	Propel Relief F.P./R.P.	320 +/-10	Actual Measurement	Within Spec.	MHF	
12.7	Pilot Pressure					
I.	Idle (Kg/Sq. Cm)	35	Actual Measurement	Within Spec.	MHF	
ii.	Full (Kg./Sq.Cm)	45+/-5	Actual Measurement	Within Spec.	MHF	
12.8	Operator's Cabin					
a.	Air Conditioner	HITACHI	Functional Check	Functions OK	MHF	

N.B: MHF - Machine History File;
TC : Test Certificate

Tata Hitachi Construction Machinery Co. Pvt. Ltd.

12/08/25

Technical Details of offered centralized automatic lubrication system indicating the name of manufacturer and Indian equivalent of the recommended lubricants,

Sec-VI, Tech Specs, Part D, Clause – D.4.8

Name of manufacturer : LINCOLN

Indian equivalent of the recommended lubricants : Details Provided in Part C, Clause-C.6.4 (Tech Doc 1)

AUTO-LUBRICATION DEVICE

The auto-lubrication device automatically lubricates the front attachment pins, the swing bearing, and the center joint. The major components of this system are the grease pump, the auto-lubrication solenoid valve, the vent valve, the auto-lubrication interval switch, the auto-lubrication mode switch, the pressure switch (auto-lubrication circuit), and the pressure switch (manual lubrication circuit).

This system can be shifted to in either the auto or the manual lubrication mode, or turned OFF by operating the auto-lubrication mode switch. When the switch is in the auto-lubrication mode position, grease is automatically supplied at the interval set by the auto-lubrication interval switch. When the switch is in the OFF position, greasing stops. When the switch is in the manual lubrication mode position, the auto-lubrication function is not operated. Greasing can be performed by a grease gun.

NOTE: Refer to SYSTEM / Control System for the system operation.

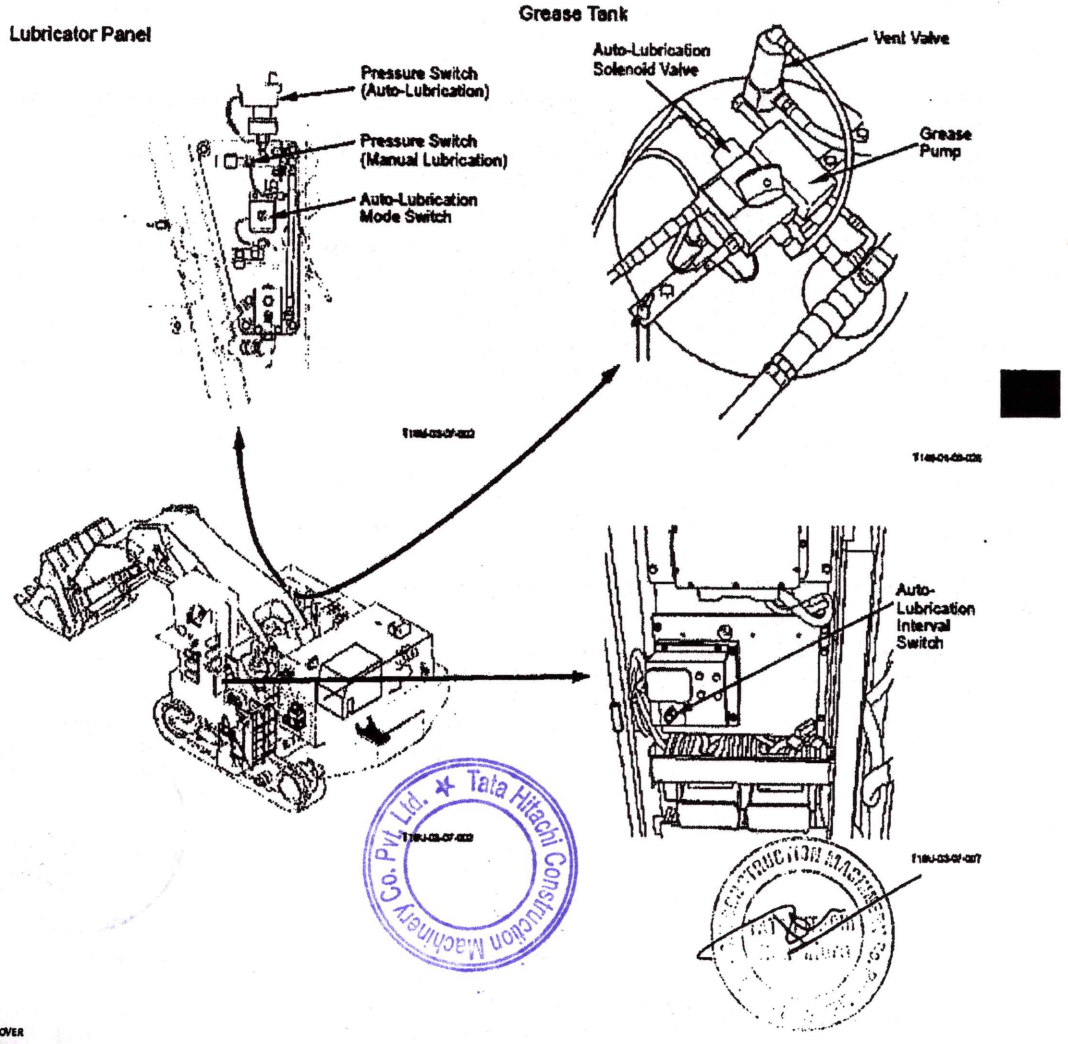

SYSTEM / Control System

AUTO-LUBRICATION CONTROL

Purpose: This automatically applies grease to the front attachment joint pins, the swing bearing, and the center joint at preset intervals.

Operation:

- Auto-Lubrication

1. When the auto-lubrication switch is set to the AUTO position, current from terminal 76-13 of MC is grounded through the auto-lubrication switch. MC recognizes that the auto-lubrication switch is in the AUTO position.
2. Current from terminal 48-18 of MC flows to auto-lubrication solenoid valve at intervals preset by the auto lubrication interval switch, and auto-lubrication solenoid valve 1 is operated.
3. Pressure oil from the pilot pump is supplied to the vent valve and the grease pump drive motor through the pressure reducing valve so that the grease pump is operated.
4. As pilot pressure is routed to the vent valve, the vent valve is closed the return circuit from the grease pump to the grease tank is blocked. Therefore, grease is applied to the front attachment lubrication circuit.
5. Grease pressure in the front attachment lubrication circuit is routed to pressure switch 1. When grease pressure in the front attachment lubrication circuit increases beyond the set pressure (17.7 MPa, (2573 psi)) set by pressure switch 1, pressure switch 1 is turned ON. Terminal 48-38 of MC is grounded through pressure switch 1. MC detects that grease pressure in the front attachment lubrication circuit increases.
6. MC lights the alarm LED (red), and sends signals to IDU through the CAN communication so that the warning is displayed on the monitor.
7. MC operates the auto-lubrication solenoid valve for 150 seconds at the preset intervals for intermittent lubrication.

Tata Hitachi Construction Machinery Co. Pvt. Ltd.

SYSTEM / Control System

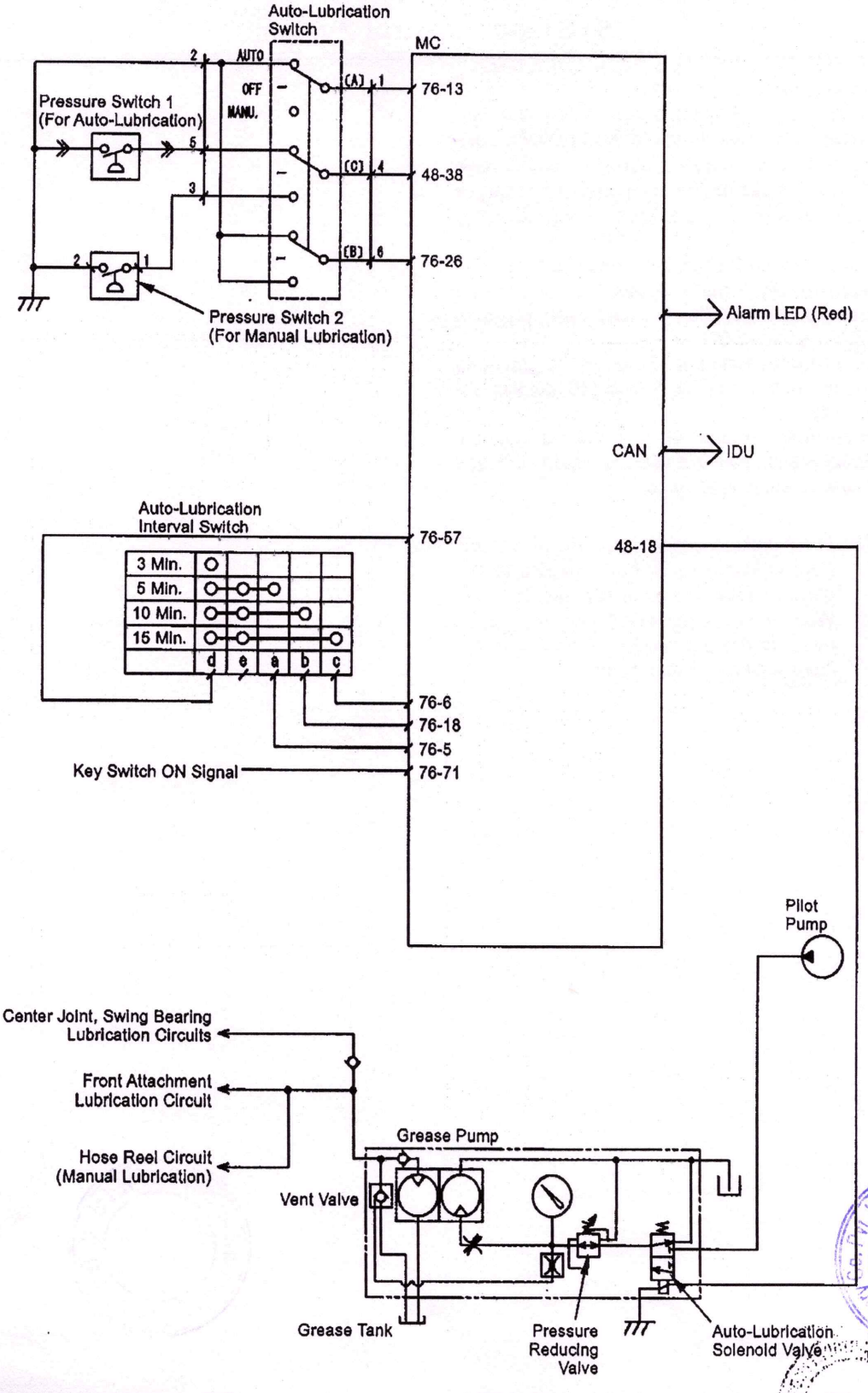

SYSTEM / Control System

- Manual Lubrication
  1. In manual lubrication mode, when the auto-lubrication switch is set to the MANUAL position, MC keeps auto-lubrication solenoid valve ON. This causes the grease pump to discharges grease and allows the grease gun to apply grease.
  2. Pressure switch 2 checks if manual lubrication is made normally. When lubrication circuit pressure increases beyond 23.5 MPa (3416 psi), pressure switch 2 is turned ON.
  3. Current from terminal 48-38 of MC is grounded through pressure switch 2 and MC detects abnormality.
  4. Current from terminal 48-18 of MC is stopped, auto lubrication solenoid valve is turned OFF, and the grease pump is stopped.

NOTE: In manual lubrication mode, the alarm LED (red) is kept ON, and the warning is displayed on the monitor at all times.
When a grease gun is not used, the grease pump is not operated as pressure in the lubrication circuit increases.

Tata Hitachi Construction Machinery Co. Pvt. Ltd.

SYSTEM / Control System

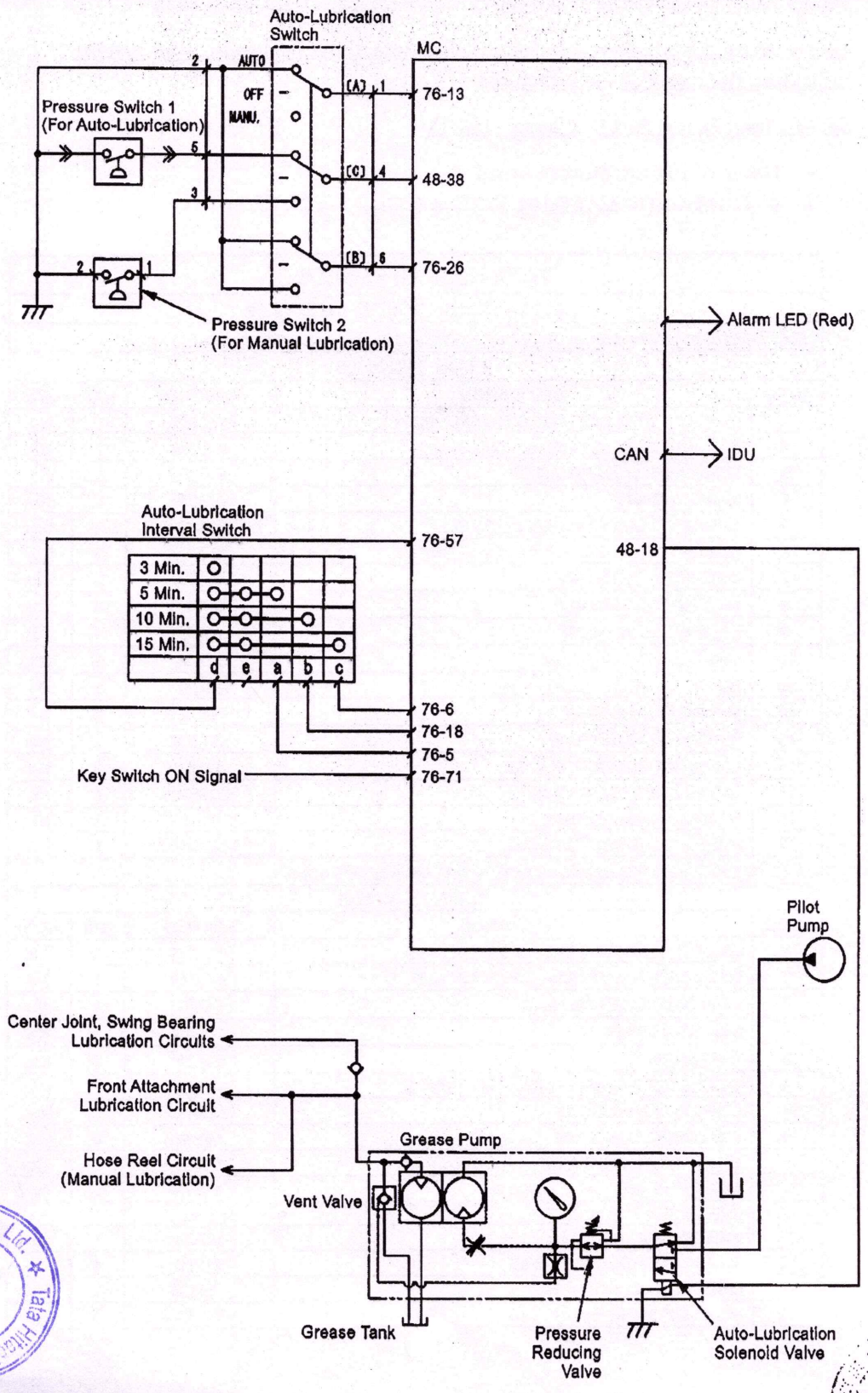

Tender Number: CIL/C2D/20 Cum EHF Shovel/R-151/394 Date: 02.11.2023

Technical Details of offered Automatic fire detection and suppression system indicating the name of manufacturer

Sec-VI, Tech Specs, Part D, Clause – D.4.13

- Name of manufacturer : Ansul
- 4 -TANK 44-NOZZLE A101 SYSTEM (ZONE 1 & ZONE 2)

TATA HITACHI EX 3600 E				
ANSUL 4 TANK 44 NOZZLE DCP SYSTEM				
ZONE -1: Main motor, pump drive unit, hydraulic pump, battery, cab heater unit				
2 TANK 24 NOZZLE				
SL.NO	DESCRIBTION	PART NO	QTY	UOM
1	LT-A-101-125 AGENT TANK & BRACKET ASSY	427745	1	No
2	LT-A-101-50 AGENT TANK & BRACKET ASSY	433788	1	No
3	LT-30 CARTRIDGE ASSEMBLY	24333	1	No
4	MOUNTING RING	428404	1	No
5	TRIPPLE TEE (3/4 x 1/2 x 1/2 x 1/2 x 1/2)	16424	8	Nos
6	TRIPPLE TEE (1" x 3/4" x 3/4" x3/4" x 3/4")	433759	2	Nos
7	C 1/2 NOZZLE WITH CAP	53791	12	Nos
8	V 1/2 NOZZLE WITH CAP	56748	8	Nos
9	F 1/2 NOZZLE WITH CAP	16449	4	Nos
10	MANUAL ACTUATOR ASSY	57484	1	No
11	SAFETY PRESSURE RELIFE VALVE	15677	1	No
12	CHECKFIRE MP-N ASSY	427312	1	No
13	BATTERY MODULE (SC-N)	427308	1	No
14	ANSUL LINER DETECTION WIRE	71230	1	No
15	END OF LINE RESISTOR ASSY	426520	1	No
16	PORTABLE EXTINGUISHER	MCI-EXT	1	No
17	HOSE ,ADAPTORS FITTING ETC.	MCI85002	1	Lot
ZONE 2: Lubricator, Hydraulic oil tank, swing device, Oil cooler				
2 TANK 20 NOZZLE				
SL.NO	DESCRIPTION	PART NO	QTY	UOM
1	LT-A-101-125 AGENT TANK & BRACKET ASSY	427745	1	No
2	LT-A-101-50 AGENT TANK & BRACKET ASSY	433788	1	No
3	LT 30 CARTRIDGE ASSEMBLY	24883	1	No
4	MOUNTING RING	428404	1	No
5	TRIPPLE TEE	16424	8	Nos
6	TRIPPLE TEE (1" x 3/4" x 3/4" x3/4" x 3/4")	433759	2	Nos
7	C 1/2 NOZZLE WITH CAP	53791	12	Nos
8	V 1/2 NOZZLE WITH CAP	56748	8	Nos
9	MANUAL ACTUATOR ASSY	57484	1	No
10	SAFETY PRESSURE RELIFE VALVE	15677	1	No
11	CHECKFIRE MP-N ASSY	427312	1	No
12	BATTERY MODULE (SC-N)	427308	1	No
13	ANSUL LINER DETECTION WIRE	71230	1	No
14	END OF LINE RESISTOR ASSY	426520	1	No
15	HOSE ,ADAPTORS FITTING ETC.	MCI85002	1	Lot

Tata Hitachi Construction Machinery Co. Pvt. Ltd. Tata Hitachi Construction Machinery Co. Pvt. Ltd. Bengaluru

12/08/25

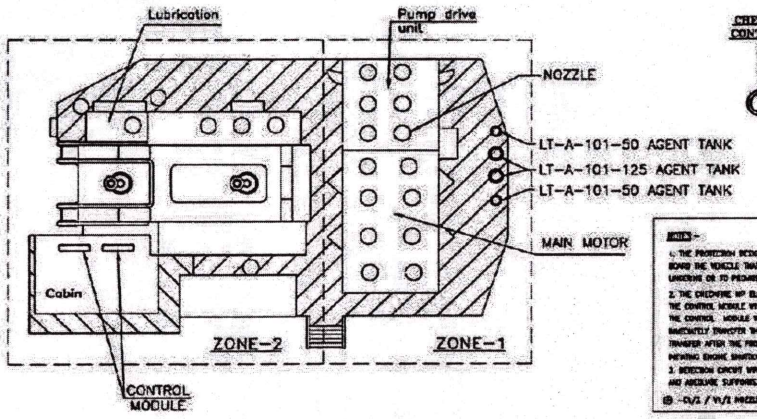

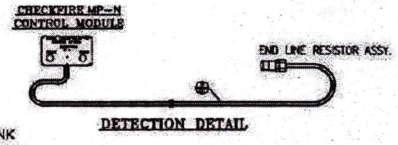

NOTES:-

1. THE PROTECTION DESIGNED ALSO INCLUDE ONE HAND PORTABLE EXTINGUISHER LOCATED ON BOARD THE VEHICLE THAT CAN BE USED TO MANUALLY SUPPRESS A RESIDUAL FIRE THAT MAY BE LINGERING OR TO PREPARE AN ESCAPE ROUTE.
2. THE CHECKFIRE MP ELECTRIC DETECTION & ACTUATION WILL BE UTILIZED TO AUTOMATICALLY OPERATE THE DRY CHEMICAL. THE CONTROL MODULE WILL HAVE IT'S FIRST TIME DELAY SET AT 10SEC. AND THE SECOND TIME DELAY SET 10SECS. THE CONTROL MODULE WILL OPERATE WHEN AN ALARM CONDITION IS SENSED IN THE DETECTION CIRCUIT. THIS WILL IMMEDIATELY TRANSFER THE ALARM RELAY, NORMALLY CLOSED SHUTDOWN RELAY CONTACTS IN THE CONTROL MODULE WILL TRANSFER AFTER THE FIRST TO SECS ALARM TIME DELAY PERIOD.
INITIATING ENGINE SHUTDOWN. AFTER A SECOND TIME DELAY, THE DRY CHEMICAL SYSTEM WILL DISCHARGE.
3. DETECTION CIRCUIT WIRE WILL BE ROUTED THROUGH HAZARD AREAS WITH ADEQUATE CLEARANCE TO HEATED SURFACES AND ADEQUATE SUPPORTS.
⊕ -C1/2 / V1/2 NOZZLES

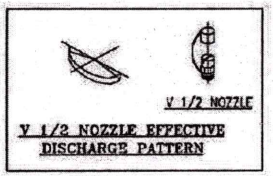

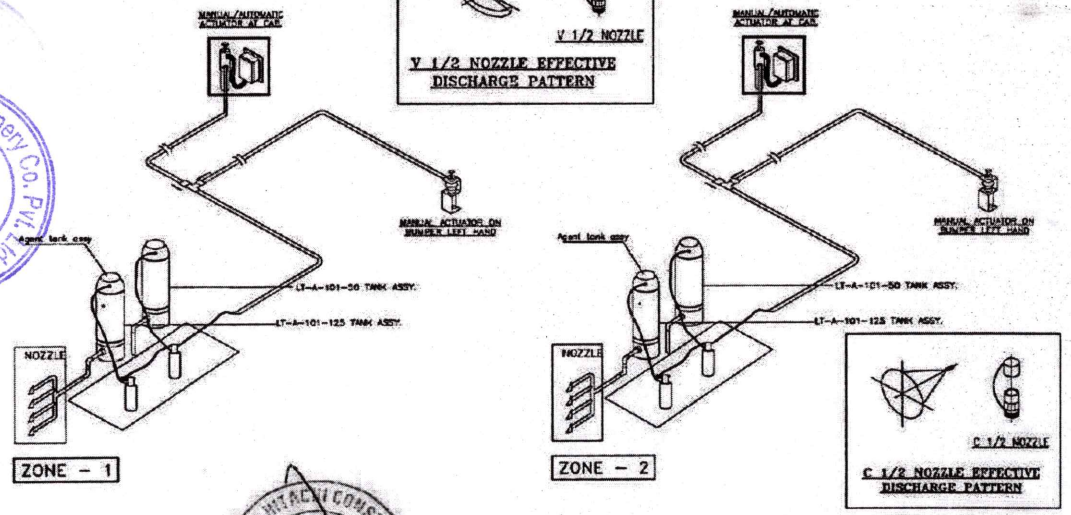

20 CUM HYDRAULIC FACE SHOVEL WITH ELECTRICT DRIVE

CHECK FIRE MP-N SYSTEM

ANSUL 4 TANK 44 NOZZLE DCP SYSTEM

ZONE -1: Main motor, pump drive unit, hydraulic pamp, battery, cab heater un

2 TANK 24 NOZZLE

SL.NO	DESCRIBTION	PART NO	QTY	UOM
1	LT-A-101-125 AGENT TANK & BRACKET A	427745	1	No
2	LT-A-101-50 AGENT TANK & BRACKET AS	433788	1	No
3	LT-30 CARTRIDGE ASSEMBLY	24333	1	No
4	MOUNTING RING	428404	1	No
5	TRIPPLE TEE (3/4 x 1/2 x 1/2 x 1/2 x 1/2)	16424	8	Nos
6	TRIPPLE TEE (1" x 3/4" x 3/4" x3/4" x 3/4	433759	2	Nos
7	C 1/2 NOZZLE WITH CAP	53791	12	Nos
8	V 1/2 NOZZLE WITH CAP	56748	8	Nos
9	F 1/2 NOZZLE WITH CAP	16449	4	Nos
10	MANUAL ACTUATOR ASSY	57484	1	No
11	SAFETY PRESSURE RELIFE VALVE	15677	1	No
12	CHECKFIRE MP-N ASSY	427312	1	No
13	BATTERY MODULE (SC-N)	427308	1	No
14	ANSUL LINER DETECTION WIRE	71230	1	No
15	END OF LINE RESISTOR ASSY	426520	1	No
16	PORTABLE EXTINGUISHER	MCI-EXT	1	No
17	HOSE ,ADAPTORS FITTING ETC.	MCI85004	2	Lot

ZONE 2: Lubricator, Hydraulic oil tank, swing device, Oil cooler

2 TANK 20 NOZZLE

SL.NO	DESCRIBTION	PART NO	QTY	UOM
1	LT-A-101-125 AGENT TANK & BRACKET A	427745	1	No
2	LT-A-101-50 AGENT TANK & BRACKET AS	433788	1	No
3	LT 30 CARTRIDGE ASSEMBLY	24883	1	No
4	MOUNTING RING	428404	1	No
5	TRIPPLE TEE	16424	8	Nos
6	TRIPPLE TEE (1" x 3/4" x 3/4" x3/4" x 3/4	433759	2	Nos
7	C 1/2 NOZZLE WITH CAP	53791	12	Nos
8	V 1/2 NOZZLE WITH CAP	56748	8	Nos
9	MANUAL ACTUATOR ASSY	57484	1	No
10	SAFETY PRESSURE RELIFE VALVE	15677	1	No
11	CHECKFIRE MP-N ASSY	427312	1	No
12	BATTERY MODULE (SC-N)	427308	1	No
13	ANSUL LINER DETECTION WIRE	71230	1	No
14	END OF LINE RESISTOR ASSY	426520	1	No
15	HOSE ,ADAPTORS FITTING ETC.	MCI85001	1	Lot

REV.	DATE	DESCRIPTION	CHK.

MACO | MACO CORPORATION (I) PVT. LTD.

SCALE: NTS		DATE	CLIENT: TATA HITACHI
DRAWN	MK	19/12/2023	
CHECKED	SB	19/12/2023	MACHINE: EX 3600 E
APPROVED	SS	19/12/2023	

TITLE: ANSUL AUTOMATIC FIRE DETECTION & SUPPRESSION SYSTEM FOR ELECTRIC SHOVEL 20 CUM EXCAVATOR 4 TANK 44 NOZZLE (MODEL: EX 3600 E)

DRG. NO. MCI/TATA HITACHI/2023-24/GA/001 | SHEET 1 OF 1 | REV 0

Tata Hitachi Construction Machinery Co. Pvt. Ltd.

TATA HITACHI CONSTRUCTION MACHINERY CO. Pvt. Ltd. Bengaluru

12/08/25

PRODUCT OVERVIEW

ANSUL

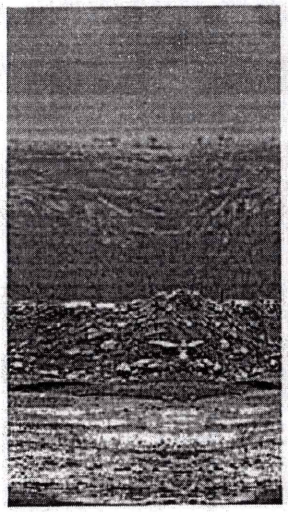

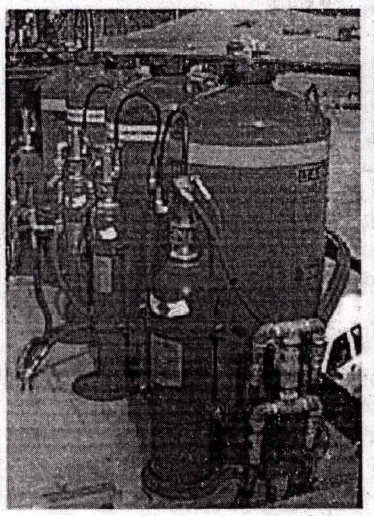

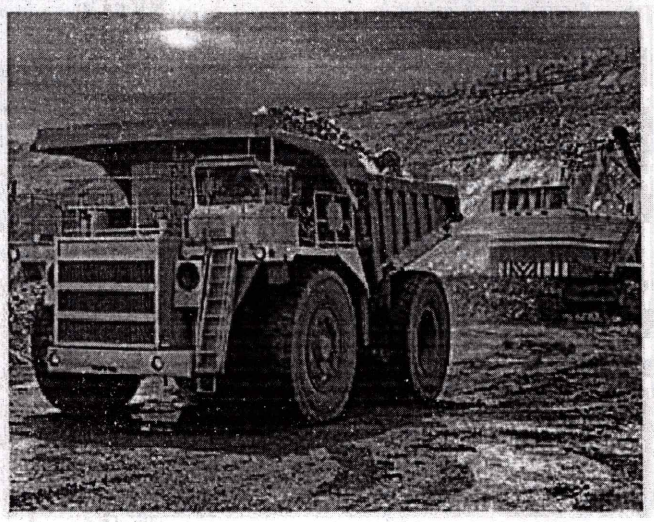

A-101/LVS Twin-Agent Suppression System

Combined agent performance for ultimate protection

- Rapid flame knockdown, cooling and securement
- Automatic or manual operation
- 24/7 fire detection
- Multiple design options
- FM approved and CE marked
- AS 5062 compliant

The combined performance of the ANSUL® A-101/LVS Twin-Agent Fire Suppression System provides superior protection in applications where superheated equipment works around the clock, often in rugged hazardous environments. The FM-approved, twin-agent combination is designed to protect large, non-road construction and mining equipment and specialty vehicles such as those found in the waste management industry. This larger class of equipment brings greater volumes of oils, fuels and hydraulic fluids under pressure in hydraulic lines which, if ruptured, can cause fuel to spray onto hot surfaces and possibly ignite.

Double the Agent, Double the Protection

While the dry chemical knocks down flames, the liquid agent cools surrounding areas and flows readily into spaces where flammable liquids may settle. The LVS agent provides both fire suppression and superior cooling of superheated surfaces while blanketing the fuel and cutting off oxygen to help prevent reflash.

The A-101 dry chemical portion of the system can be designed to flood entire spaces with dry chemical agent or aim nozzles to protect specific high-hazard areas. Both systems are designed to discharge simultaneously when actuated manually or automatically with the option of extending the dry chemical discharge. The twin-agent system operates within a temperature range of -40°F to 140°F (-40°C to 60°C).

Protection Starts with 24/7 Detection

The CHECKFIRE system is used with the A-101/LVS twin-agent system to provide around-the-clock, automatic, fire detection and actuation. The rugged control module is designed to withstand shock, vibration and extreme environmental conditions. The CHECKFIRE system includes supervised circuitry, adjustable shutdown, discharge time delays and auxiliary shutdown relay.



Hitachi Construction Machinery Co. Pvt. Ltd. 12/3

TATA HITACHI CONSTRUCTION MACHINERY CO. PVT. LTD. Bengaluru

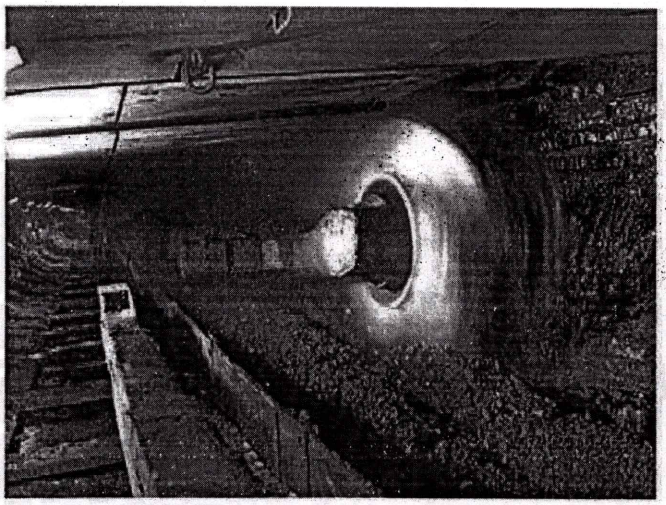

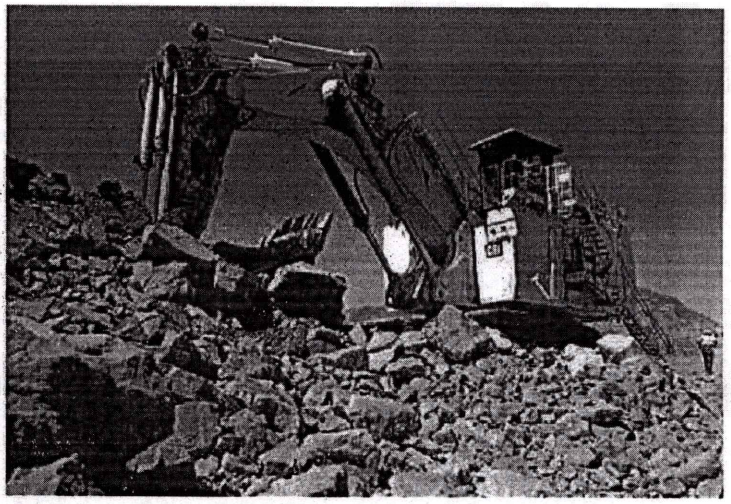

APPLICATIONS FOR THE A-101/LVS TWIN-AGENT FIRE SUPPRESSION SYSTEM

Draglines

Haul trucks

Large excavators/shovels

Slag pot and/or slab carriers

Tunnel boring machines

Underground mining equipment

Waste management equipment

Wheeled loaders

The Ultimate Fire Suppression Solution

The ANSUL brand promises a full range of quality fire protection solutions – from automatic detection and suppression systems to a complete line of wheeled and hand portable fire extinguishers and more. Plus, our extensive network of Authorized ANSUL Distributors provides factory-trained professionals to serve our customers virtually anywhere in the world.

A Passion for Protection

Dedicated customer support. Extensive product portfolio. Engineering excellence. Trusted, proven brands. Johnson Controls offers all of these attributes, plus a passion for protection. It's what drives us to create solutions to help safeguard what matters most – your valued people, property and business.

Hitachi Construction Machinery Co. Pvt. Ltd.

TATA HITACHI CONSTRUCTION MACHINERY CO. PVT. LTD. Bangalore

Johnson Controls ▪ One Stanton Street, Marinette, WI 54143-2542, USA ▪ Tel: +1 715 735 7411
www.johnsoncontrols.com ▪ © 2017 Johnson Controls. All rights reserved. ▪ Form No. F-2013359-01

Johnson Controls

12/08/25

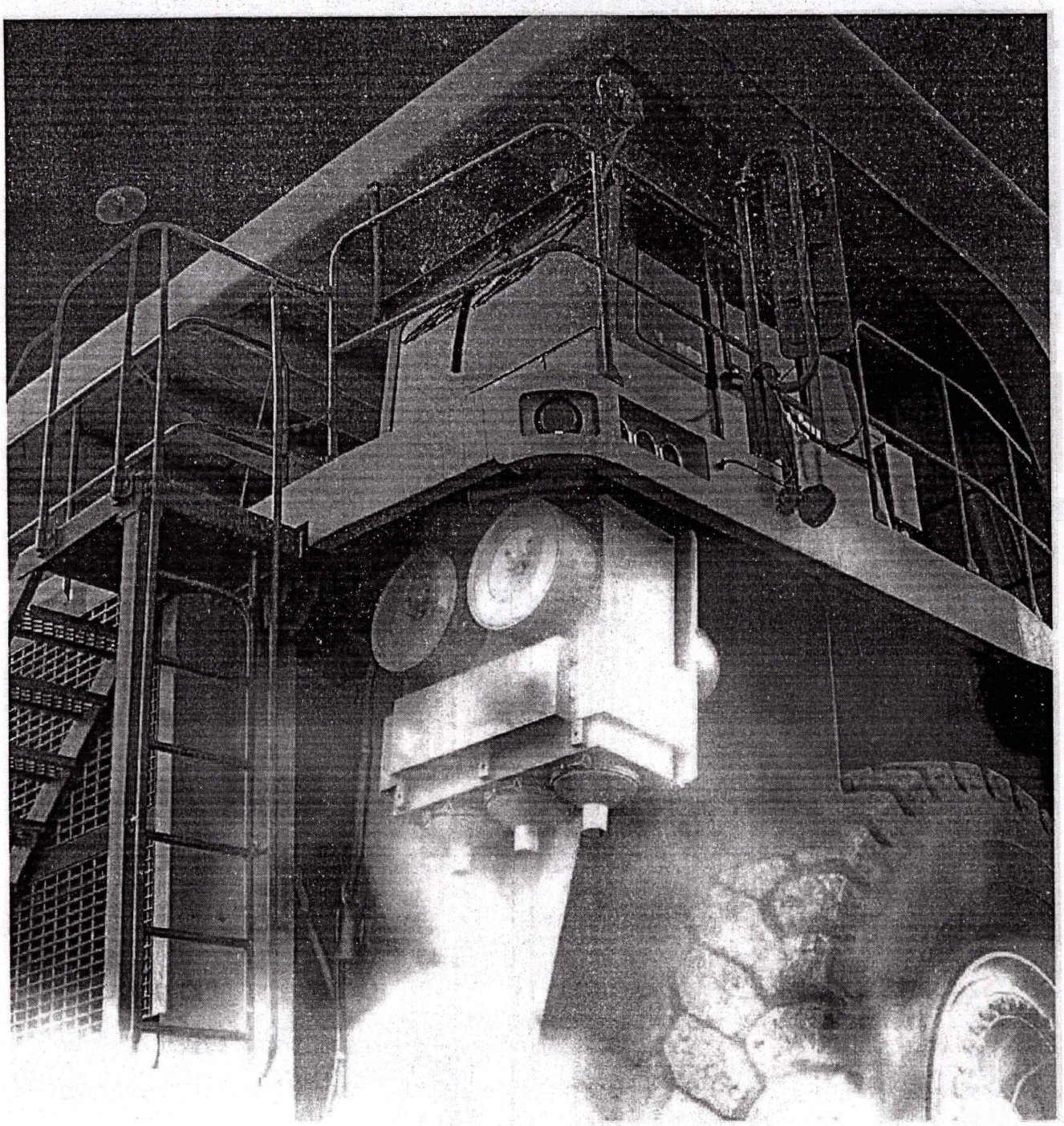

UGH CUSTOMERS

Mobile Equipment Fire Suppression Systems

ANSUL

A Tyco International Company

PROTECTING HEAVY EQUIPMENT CALLS FOR BRUTE FORCE

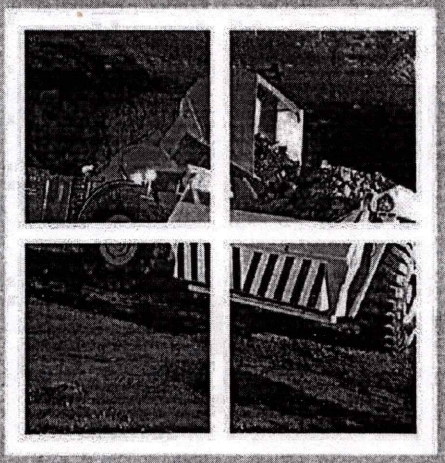

Before the introduction of ANSUL® vehicle fire suppression systems to the mining industry in the late 1960s, the loss of equipment, productivity and life to vehicle fire was all too common. Today, ANSUL protection is the preferred solution in this and other high-risk industries. Around the world, industries that depend on their heavy equipment trust ANSUL non-road mobile fire suppression solutions to protect them.

SYSTEMS DESIGNED FOR MODERN REALITIES

Excavators, tunnel boring machines, harvesters, transit buses and other heavy machines work around the clock, often in rugged, hazardous environments. Highly flammable fuels, oils and hydraulic fluids flow through pressurized lines within inches of super-heated engine blocks, manifolds and turbochargers. One ruptured line can result in fast-spreading fire. With ANSUL Vehicle Fire Suppression Systems, however, protection is assured, 24-hours-a-day, 365 days-per-year.

FM APPROVED ■ NFPA, UL 1254, AND AS 5062 COMPLIANT ■ CE MARKED
GLOBAL DISTRIBUTION NETWORK ■ PROVEN CARTRIDGE OPERATION
MULTIPLE CONFIGURATION/DESIGN OPTIONS ■ EFFECTIVE ON A RANGE OF FIRES
MANUAL OR AUTOMATIC DETECTION/ACTUATION

SAFEGUARDING INVESTMENTS AROUND THE WORLD

Protecting mobile equipment of all shapes and sizes presents a unique set of challenges often requiring multiple solutions. Investing in an ANSUL fire detection/suppression system can minimize repairs and replacement, keep insurance cost down, reduce downtime, and help prevent operator injury. Trained ANSUL distributors can design, install and service a system that offers the ultimate fire protection for a specific vehicle.

ANSUL® LVS LIQUID AGENT FIRE SUPPRESSION SYSTEMS

ANSUL LVS agent flows readily into areas where flammable liquids settle providing both fire suppression and superior cooling of superheated surfaces while blanketing the fuel and cutting off oxygen to help prevent reflash.

- Corrosion-resistant tank capacities of 5 to 30 gallons (18.9 to 113.6 L)
- LVS offers extremely flexible design options and ease of service
- 30 to 60 seconds of discharge effective on Class A combustibles

CUSTOMERS WHO BENEFIT FROM ANSUL MOBILE EQUIPMENT FIRE SUPPRESSION SYSTEMS:

- AGRIBUSINESS
- AVIATION
- FORESTRY
- METAL PROCESSING
- POWER GENERATION
- SURFACE AND UNDERGROUND MINING
- TRANSPORTATION
- WASTE PROCESSING

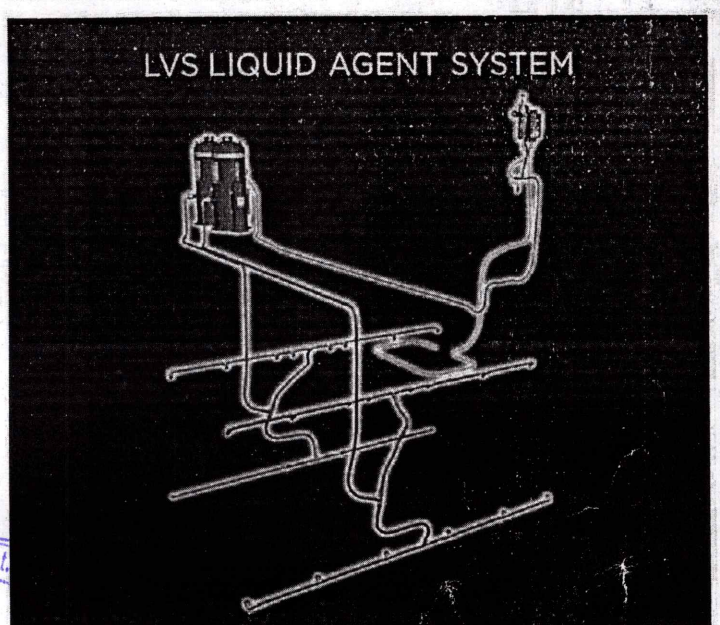

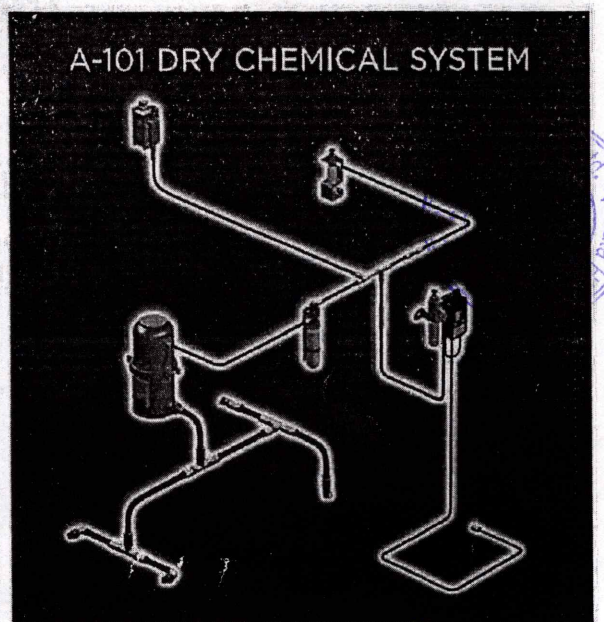

- Effective operating range of -40 to 140°F (-40 to 60°C)
- Proven for ten years in applications using superheated equipment

ANSUL® A-101 DRY CHEMICAL FIRE SUPPRESSION SYSTEMS

FORAY multipurpose dry chemical agent quickly knocks down flames by total flooding of entire volumes or direct application on specific high-hazard targets.

- 10 to 250 lb. (4.5 to 113.4 kg) agent tank capacities
- LT-A-101 model is approved for use in temperature extremes from -65 to 210°F (-54 to 99°C).
- LT-LP-A-101 low-profile model provides protection in environments and applications where space is at a premium.

ANSUL® A-101/LVS TWIN-AGENT FIRE SUPPRESSION SYSTEMS

For those who want the combined performance of a twin-agent system, FORAY dry chemical and LVS agent provide the ultimate one-two punch. While the dry chemical is knocking down flames, superior LVS agent cools surrounding areas while helping to minimize the possibility of reflash. LVS system components are built for corrosion resistance and operate effectively within a temperature range of -40 to 140°F (-40 to 60°C).

A-101 LARGE DRY CHEMICAL SYSTEM

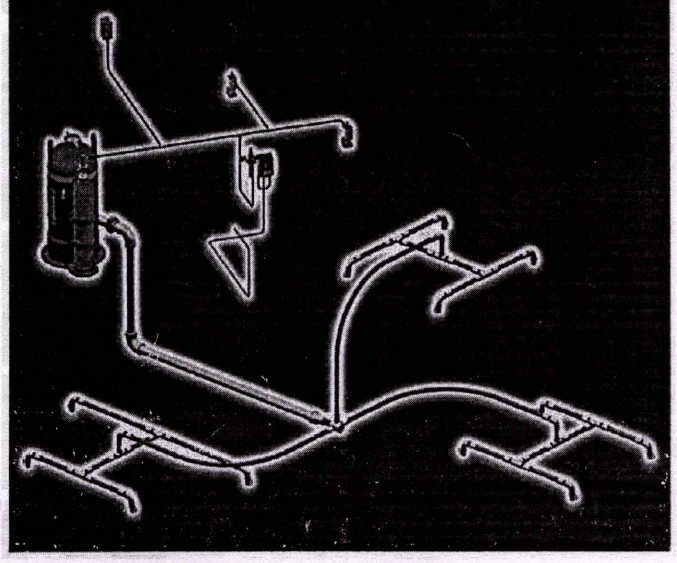

A-101/LVS TWIN-AGENT SYSTEM



CHECKFIRE DETECTION AND ACTUATION SYSTEMS

Exclusive ANSUL CHECKFIRE electronic detection and actuation systems provide detection, alarm, machine shutdown and actuation — all automatically if so desired.

- **CHECKFIRE SC-N (Self-Contained)**
  Rugged control modules resist shock and vibration, and feature internal diagnostics and internal/external power sources. Thermal detection options include linear wire or spot detectors.

- **CHECKFIRE MP-N (Mine Permissible)**
  Offers all the features of SC-N, plus holds MSHA approvals for use in underground mines (Permissible Applications in Explosive Methane/Air Applications).

SHARPEYE 20/20 TRIPLE IR DETECTOR

For those who desire an extra level of protection, ANSUL SharpEye infrared detection provides advanced triple-IR flame detection. Added to existing linear wire or spot detection, fire can be detected much earlier, allowing suppression to begin that much sooner. SharpEye features include sensitivity selection, automatic built-in testing, compact size and 100-degree field of vision. RS 485 compatible and FM approved. Ask your ANSUL dealer for more information on the benefits of SharpEye.

PACK RED LINE BACKUP SUPPORT

As backup to the primary fire suppression system, ANSUL RED LINE dry chemical cartridge-operated extinguishers are highly recommended. These rugged, reliable handheld units are a proven means of extinguishing a wide range of Class A, B and C fires, and provide that extra measure of protection as required by authorities having jurisdiction.



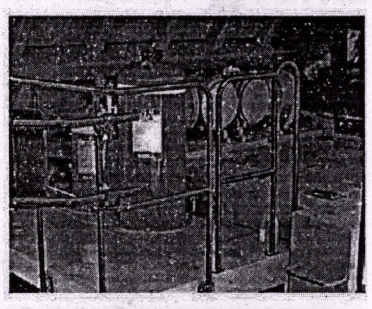

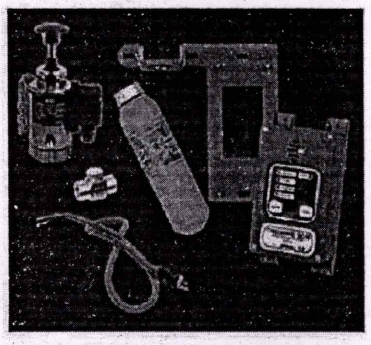

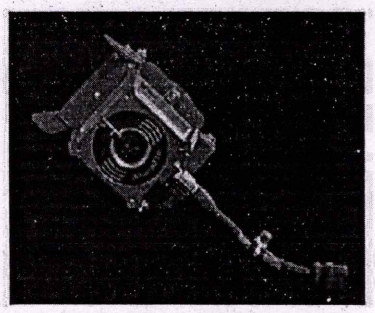

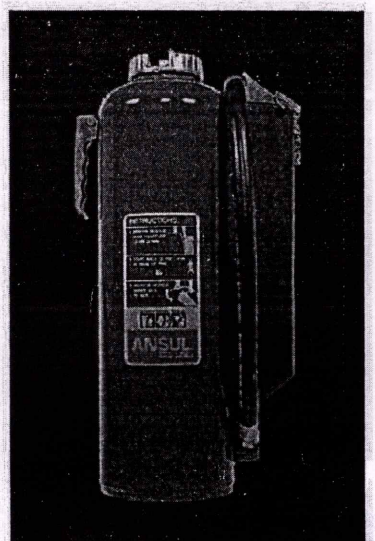

ANSUL SYSTEMS PROTECT THE WIDEST RANGE OF INDUSTRIES AND EQUIPMENT

AGRIBUSINESS
- Combines
- Cotton Harvesters
- Hay and Forage
- Sprayers
- Tractors

AVIATION
- Deicers
- Tow Tractors

FORESTRY
- Chippers
- Combi Machines
- Feller Bunchers
- Forwarders
- Harvesters
- Loaders
- Log Stackers
- Skidders
- Tub Grinders

METAL PROCESSING
- Coil Carriers
- Pallet Carriers
- High Stackers
- Ladle Carriers
- Slab Carriers
- Slag Carriers
- Straddle Carriers

MINING
- Belthead Conveyers
- Blasthole Drills
- Continuous Miners
- Crawler Dozers
- Draglines
- Electric Shovels
- Excavators
- Haul Trucks
- Haulage Tractors
- Locomotives
- Longwall Systems
- Motor Graders
- Personnel Carriers
- Scoops
- Specialty Vehicles and Machines
- Switchers
- Tunnel Boring Machines
- Wheel Loaders

POWER GENERATION/UTILITIES
- Coal Pile Maintenance
  - Crawler Dozers
  - Scrapers
  - Wheel Loaders

TRANSPORTATION
- Commercial Transit Buses
  - Alternative Fuel
  - Para Transit
  - School
- Intermodal Rail and Port Machines
  - Container Handlers
  - Gantry Cranes
  - Quay Cranes
  - Reach Stackers
  - Side Loaders
- Railway Track and Structures
  - Ballast Machines
  - Right-of-Way
  - Tie Handling and Replacement
  - Track Maintenance
  - Wrecking Cranes

WASTE PROCESSING
- Landfill Compactors
- Refuse Trucks
- Transfer/Recycle Station

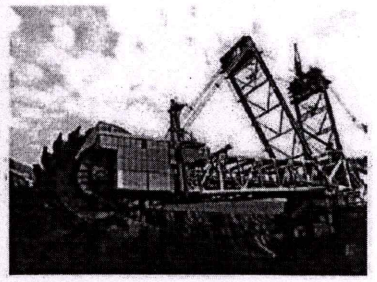

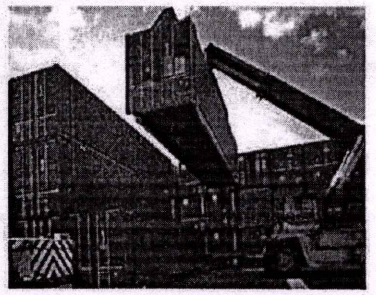
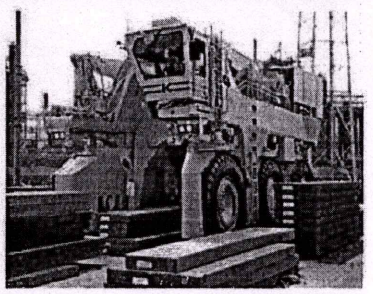
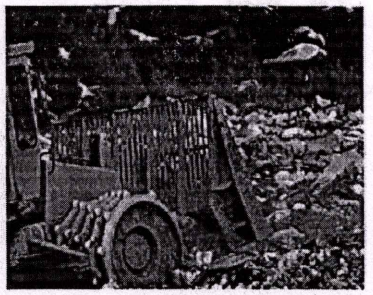
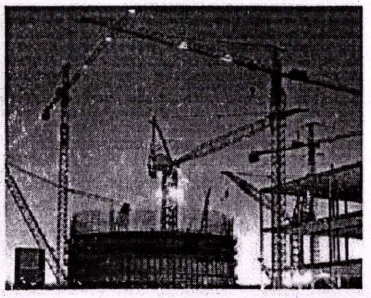

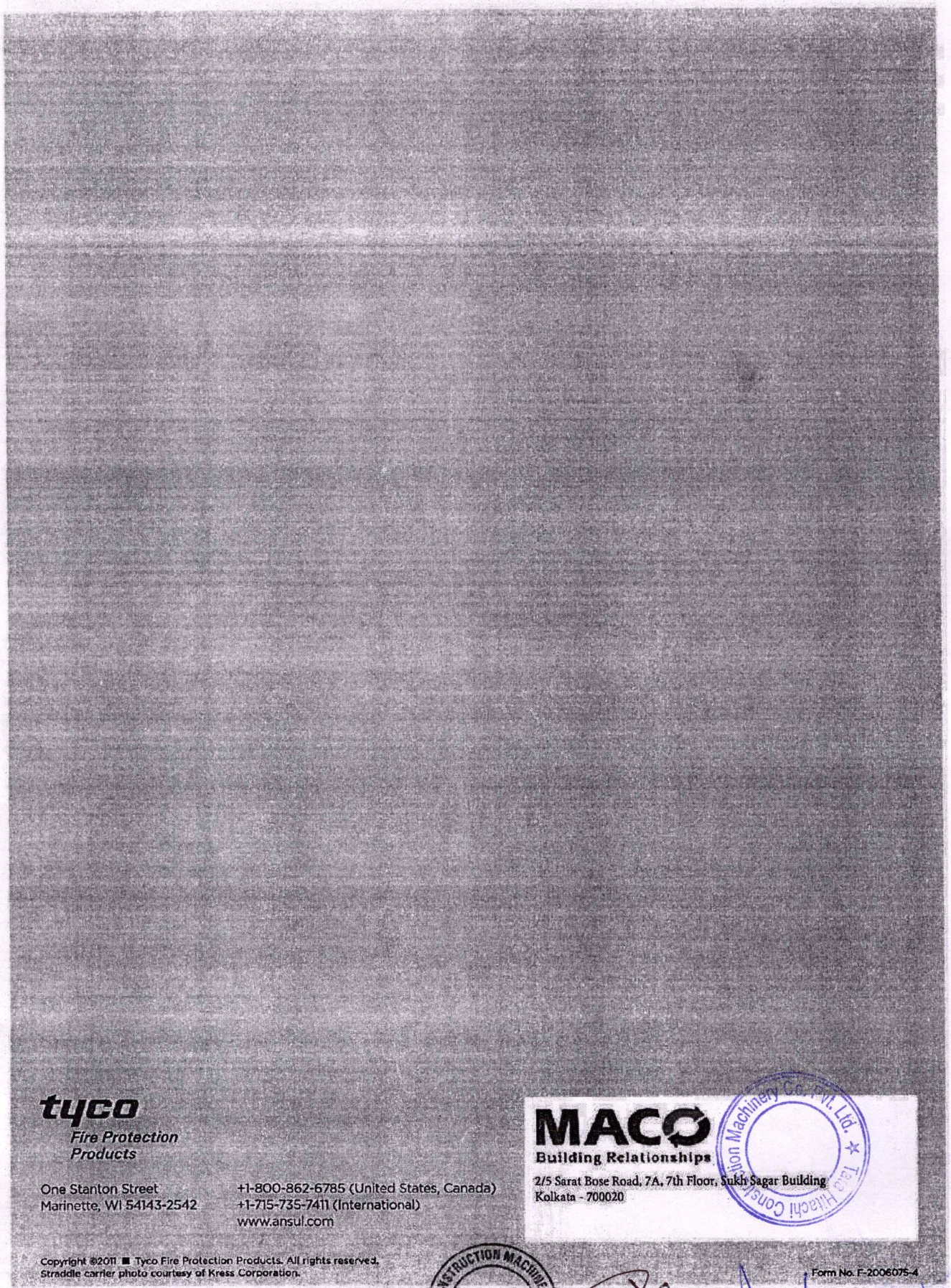

tyco
Fire Protection
Products

One Stanton Street
Marinette, WI 54143-2542

+1-800-862-6785 (United States, Canada)
+1-715-735-7411 (International)
www.ansul.com

MACO
Building Relationships
2/5 Sarat Bose Road, 7A, 7th Floor, Sukh Sagar Building
Kolkata - 700020

Hitachi Construction Machinery C.C. (P) Ltd.

Copyright ©2011 ■ Tyco Fire Protection Products. All rights reserved.
Straddle carrier photo courtesy of Kress Corporation.

Form No. F-2006075-4

Tender Number: CIL/C2D/20 Cum EHF Shovel/R-151/394 Date: 02.11.2023

Technical Details of offered fire extinguisher indicating the name of manufacturer

Sec-VI, Tech Specs, Part D, Clause – D.4.14

- **Name of manufacturer : Minimax /Associated Engineers/Ansul/ Southern electronics/CEASE Fire**

The extinguishers shall be both dry chemical powder (DCP type) and CO2 type with a minimum capacity of 5 kg and shall comply with Indian Standard IS: 15683 with latest amendment.

Tata Hitachi Construction Machinery Co. Pvt. Ltd.

12/08/25

TATA HITACHI

Reliable solutions

CHALO DESH BANAYE

THCM/CIL/20CuM HEX/DGMS/SF1/01
Date: 24.04.2024

To
Coal India Limited,
Coal Bhawan
Premises No. 4,Action Area IA,
New Town, Rajarhat,
Kolkata-700 156, India

Dear Sir,

Sub: Clarification against the shortfall sl. no 05 (Technical) - Self certificate as an undertaking in this regard that all safety features and devices are incorporated in the equipment - Section VI – Technical Specifications D.5.8 Safety Features

Tender No. CIL/C2D/20 Cum EHF Shovel/R-151/394 Date: 02.11.2023

We hereby certify that all safety features & devices as per Govt. Of India Gazette notification no. Z 20045/01/2018/S&T (HQ) dated 01.10.2018, DGMS (Tech) Circular No. 06 of 2020 dated 27.02.2020 and subsequent amendments, if any, including following shall be provided in the equipment.

a. All function cut off switch.

b. Swing Motor Brake.

c. Fire resistant / fire retarder hydraulic hoses in place of ordinary hoses to reduce the chances of fire. All the sleeves and conduits in which cable/wire are laid shall be of fire resistant type.

d. Seat Belt with seat belt reminder.

e. Vent valve, if applicable on top of hydraulic tank should be able to be removed without any tool.

f. A baffle plate between cold zone and hot zone (if applicable)

g. Provision for limiting of hydraulic cylinder-Stopper

Thanking you,

Yours sincerely,
For Tata Hitachi Construction Machinery Co. Pvt Ltd.

Authorised Signatory

D.7.Productivity & Health monitoring system:

The system shall have measuring points and self-data capturing facility for followings –

Sl No.	Parameters	Tata Hitachi Remark
a	Working hour, idle hour, based on the duration of a shift for which the equipment is switched on for operation.	Available in VHMS
b	Cumulative qty. of material handled (both in terms of Cu. M. & No. of buckets)	Cannot be provided
c	Average cycle time for each day	Cannot be provided
d	Average swing angle per day	Cannot be provided
e	Incoming voltage, current, power consumption, frequency and power factor.	Only Power consumption data can be provided
f	Hydraulic oil pressure, temperature, viscosity and water content	Hydraulic oil pressure, temperature – Available in VHMS Viscosity and water content not possible
g	All drive motors / transformer vital parameters	Ok
h	Preventive maintenance parameters	Ok
I	Predictive health monitoring parameters.	Ok
j	Additional parameters as per requirement of equipment manufacturer / user	Ok

The supplier shall provide the following:

Sl No.	Parameters	Tata Hitachi Remark
1	There has to be one integrated single online port for capturing all the vital data.	Suitable port for DATA download shall be provided
2	The real time interface telemetry port will be provided in the equipment.	Suitable port for DATA download shall be provided
3	All the data shall be available in the individual form through single port and its communication protocol must be as per global standards.	Protocols as per the global standards.
4	There shall be no additional requirement of any data converter for data capturing like Analog to Digital and vice-versa etc.	The data download port provided, however the third party has to confirm the type of expected output from the controller

5	There shall be integrated on board data management system as explained at point no.3 as above.	Pr[redacted] global standards.
6	Permission to third party for interfacing, data collection through online port.	Non-disclosure agreement (NDA) to be signed with the expected scope.
7	Signing of Non-disclosure agreement to protect intellectual property right on either side.	Agreed
8	To provide full technical support to third party vendor for interpretation and defining parameters for individual alarm to monitor equipment vital data.	Technical support shall be provided, however the expected scope to be clarified
9	The HEMM equipment supplier should provide access to data as required by end user without any financial implication to third party.	access to data shall be provided, however any hardware installations if required to be done has to be in the scope of third party. As an OEM we are not aware on those required hardwares

Tata Hitachi Construction Machinery Co. Pvt. Ltd.

12/08/25

CHALO DESH BANAYE

TATA HITACHI

Reliable solutions

THCM/CIL/20CuM HEX/PHMS/SF1/01
Date: 24.04.2024

To
Coal India Limited,
Coal Bhawan
Premises No. 4,Action Area IA,
New Town, Rajarhat,
Kolkata-700 156, India

Dear Sir,

Sub: Clarification against the shortfall sl. no 07 (Technical) – Reason for not providing measuring points in the offered PHMS Section VI – Technical Specifications D.7

Tender No. CIL/C2D/20 Cum EHF Shovel/R-151/394 Date: 02.11.2023

Sl No.	Parameters	Tata Hitachi Remark
b	Cumulative qty. of material handled (both in terms of Cu. M. & No. of buckets)	Cannot be provided
c	Average cycle time for each day	Cannot be provided
d	Average swing angle per day	Cannot be provided

It may be noted the VHMS parameters are an outcome of the performance of aggregates which are internal to the equipment like hydraulic pressures, operating temperatures etc which are captured through the CANBUS available in the machine. The above said parameters are the resultants of various parameters as captured by CANBUS and these are external to the equipment. Hence same cannot be provided.

Thanking you,

Yours sincerely,
For Tata Hitachi Construction Machinery Co. Pvt Ltd.

Authorised Signatory

Tata Hitachi Construction Machinery Co. Pvt. Ltd.

Sec-VI, Tech Specs, Part D, Clause - D.7

Detailed design of Productivity and Health monitoring system

SYSTEM / Controller

OUTLINE

The controllers are provided for each control respectively.
Each controller is connected by using CAN (Controller Area Network) in order to display on the display in cab or the monitoring of machine overall condition.

- MC: Main Controller
- ELU: Electric Lever Control Unit
- IDU: Information Display Unit
- DLU: Data Logging Unit
- CSU: Contamination Sensing Unit
- HMU: Hydraulic System Monitoring Unit

*MMS: Modular Mining System

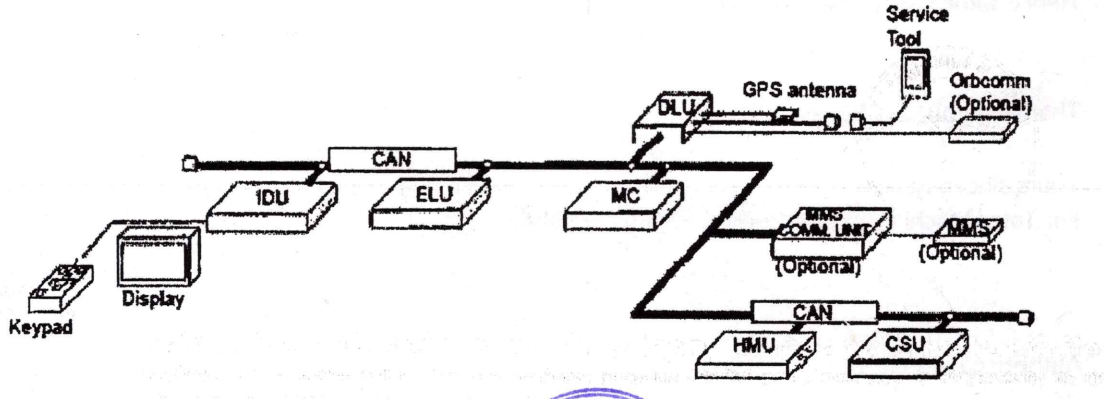

Tata Hitachi Construction Machinery Co. Pvt. Ltd.

CONSTRUCTION MACHINERY

SYSTEM / Controller

MC: MAIN CONTROLLER

Function Outline

- Fast-Filling Panel Lower Control
  When the fast-filling switch is turned ON with the pilot shut-off lever limit switch OFF, MC activates the fast-filling solenoid valve, supplies pressure oil from the pilot pump to the lift cylinder, and lowers the fast-filling panel.
  When the pilot shut-off lever limit switch is ON (in the Lock position), MC controls so that the fast-filling panel does not lower.

- Auto-Lubrication Control
  MC activates the auto-lubrication solenoid valve at intervals set by the auto-lubrication interval switch and lubricates the front joint pins, the swing bearing, and the center joint.

- Oil Cooler Fan Control
  MC controls the oil cooler fan speed selection solenoid valve in response to the signal from the hydraulic oil temperature sensor and changes the oil cooler fan motor speed at four stages.

Tata Hitachi Construction Machinery Co. Pvt. Ltd.

TATA HITACHI CONSTRUCTION MACHINERY Co. PVT. Ltd. TATA HITACHI Bengaluru

SYSTEM / Controller

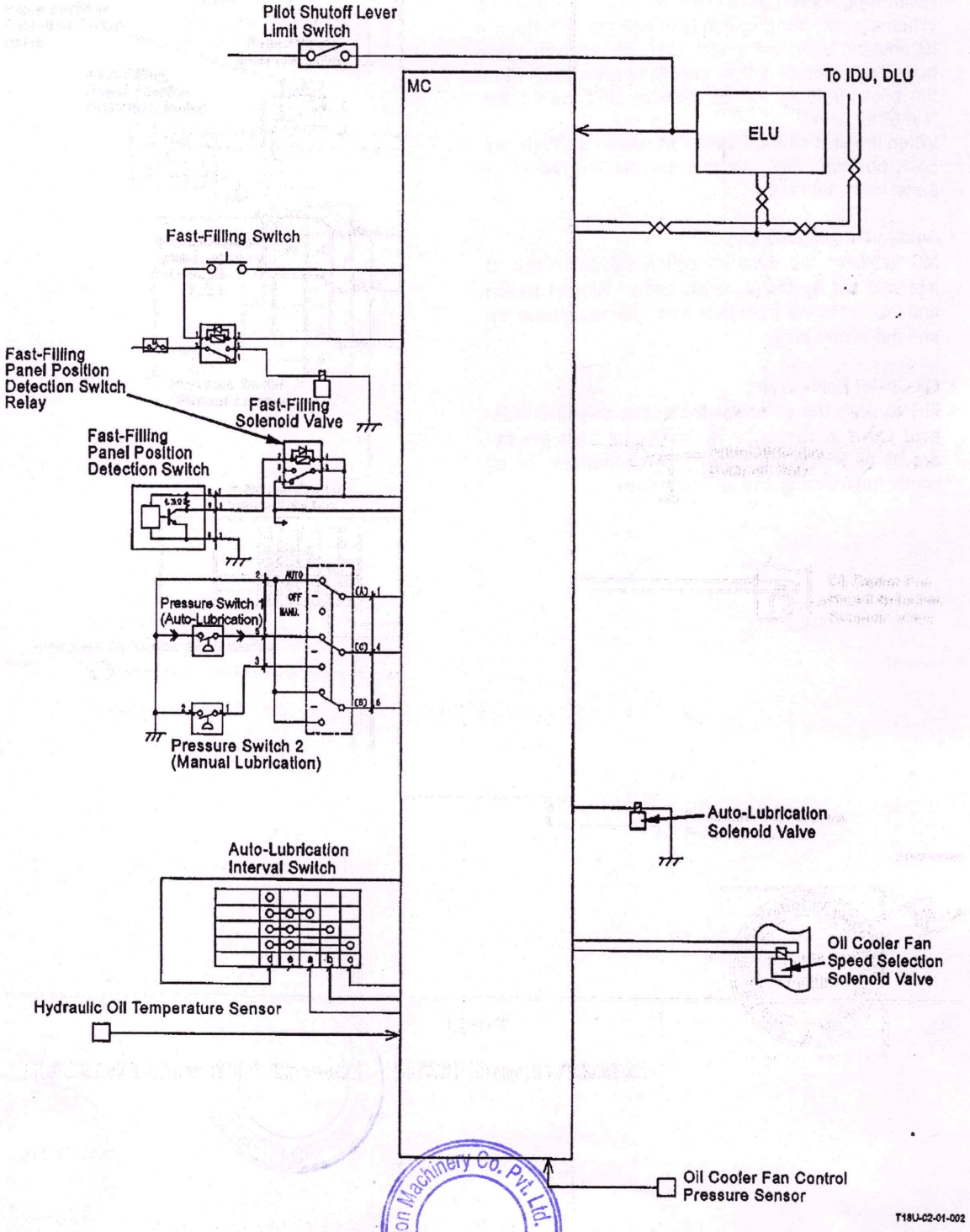

Tata Hitachi Construction Machinery Co. Pvt. Ltd.
TATA HITACHI CONSTRUCTION MACHINERY CO. PVT. LTD.
TATA HITACHI
Bengaluru

SYSTEM / Controller

- Wiper Control
  MC operates the wiper at slow speed, fast speed, or intermittently in response to the signal of the wiper switch position.
  In the intermittent mode, the wiper is operated at intervals set by the interval switch.

- Power Delay Shut-OFF Control
  MC shuts off the exciting current of the delayed power off relay at the lapse of certain period (settable from 15 seconds to 10 minutes) after the key switch is turned OFF.
  Therefore, the battery relay is ON in a certain period of time. This prevents serge voltage in the circuit which may occur while rotating the main motor due to inertia force.
  Delay time setting can be performed on the monitor display.

- Motion Alarm Control
  MC receives the signal from the travel pilot pressure sensor. When the received signal exceeds the setting, MC judges that the machine is traveling and sounds the travel alarm.

SYSTEM / Controller

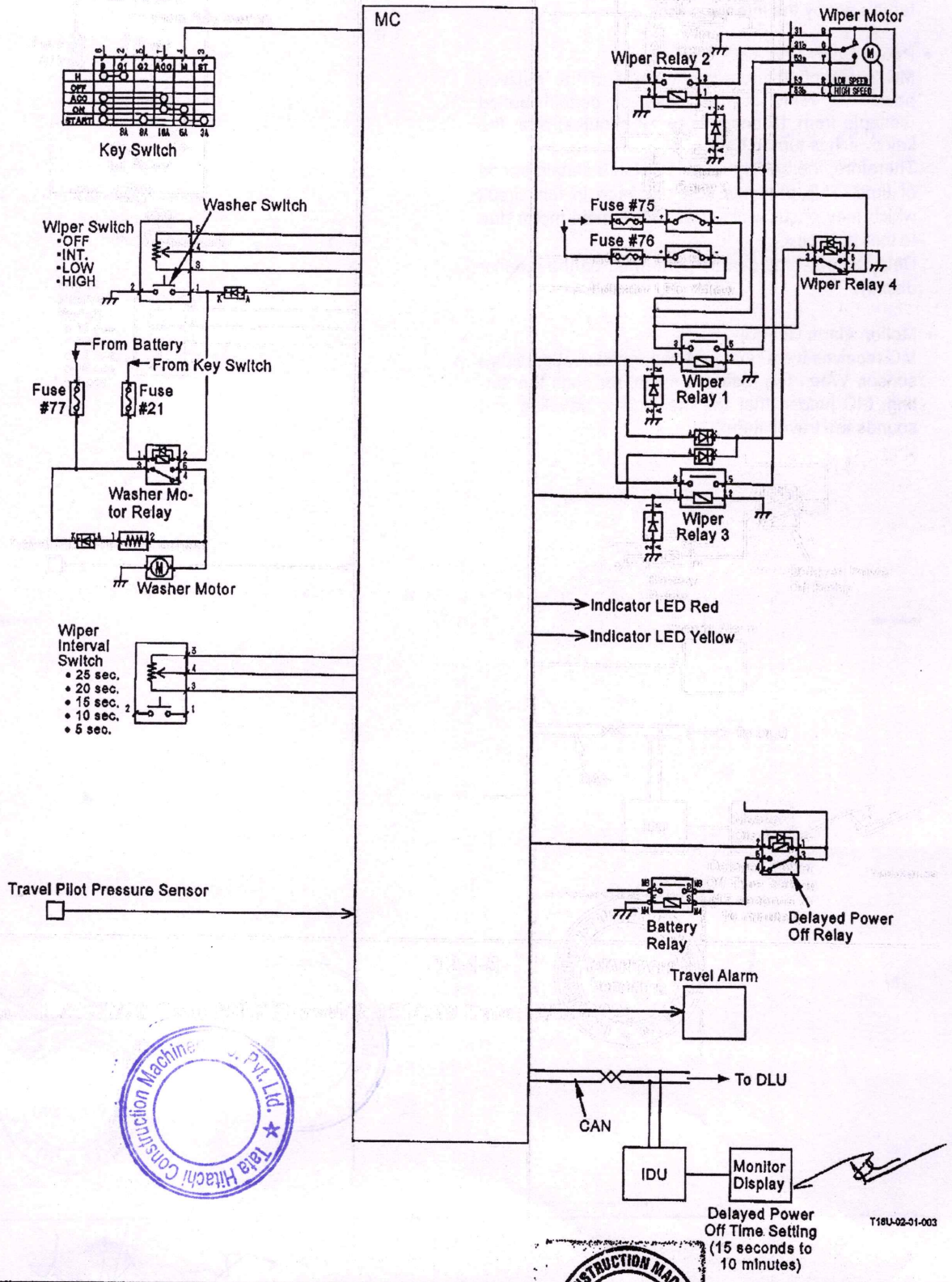

SYSTEM / Controller

- Alarm Judgment
  MC executes the following judgment.

  1. Hydraulic oil level
  2. Pump transmission oil level
  3. Emergency switch status (ON/OFF)
  4. Valves opening/closing

MC lights the indicator LED (red) or the indicator LED (yellow) according to judgment.
At the same time, IDU lights the indicator on the monitor display in response to information through CAN.

NOTE: IDU also sounds the buzzer if judgment the hydraulic oil level, the pump transmission oil level, or valves opening/closing is abnormal.

- Diagnosing
  Diagnosing is carried out on the sensors connected to MC.
  Failure information is transmitted to DLU and IDU through CAN.
  DLU logs failure information.
  IDU outputs failure information on the display.

Tata Hitachi Construction Machinery Co. Pvt. Ltd.

TATA HITACHI CONSTRUCTION MACHINERY CO. PVT. LTD. TATA HITACHI Bengaluru

SYSTEM / Controller

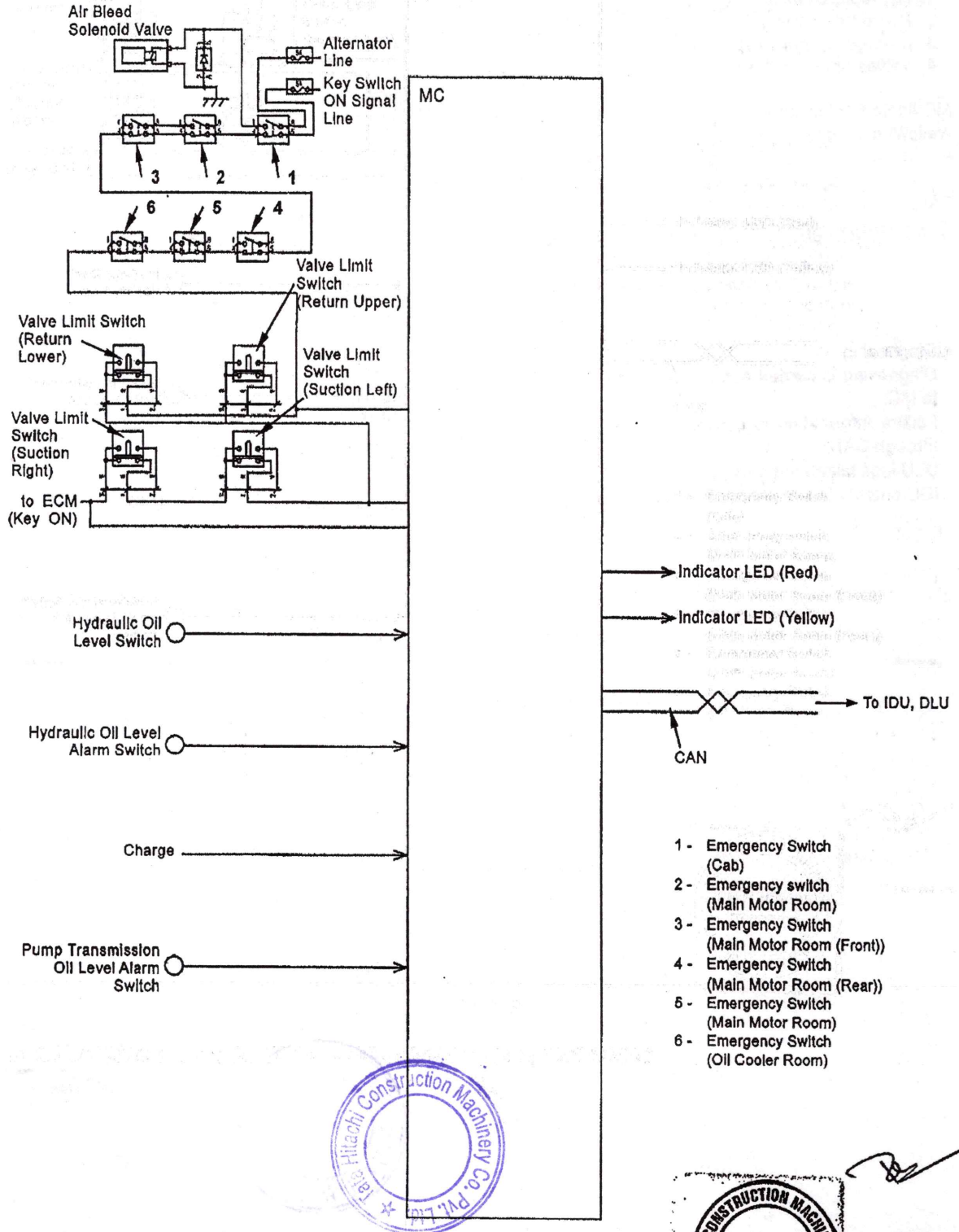

Tata Hitachi Construction Machinery Co. Pvt. Ltd.
TATA HITACHI CONSTRUCTION MACHINERY Co. Pvt. Ltd. TATA HITACHI Bengaluru

SYSTEM / Controller

- Sending Meter Displayed Data
  MC sends the meter displayed data from the cubicle to IDU through CAN.
  IDU outputs meter data on the display.
  Meter Displayed Data
  1. Main Motor Coil Temperature
  2. Main Motor Current
  3. Main Motor Power Voltage

- Sending Main Motor Intake/Exhaust Temperature Data
  MC sends intake/exhaust temperature data of the main motor to IDU in response to the signal from the sensors through CAN.

- Alarm Judgment
  MC executes the following judgment.
  1. Abnormal 6600 V power source
  2. Abnormal 210 V power source
  3. Main motor excessive current
  4. Abnormal start reactor (start-up failure)
  5. Main motor overheating
  6. Cubicle door opening/closing
  7. Abnormal cable drum
  8. Abnormal cab heater power
  9. Abnormal battery charge

  MC lights the indicator LED (red) or the indicator LED (yellow) according to judgment.
  At the same time, IDU displays each alarm on the monitor display in response to the information through CAN.

- Diagnosing
  Snapshotting is carried out by the sensors connected to MC.
  Failure information is transmitted to DLU and IDU through CAN.
  DLU logs failure information.
  IDU outputs failure information on the display.

Tata Hitachi Construction Machinery Co. Pvt. Ltd.

TATA HITACHI CONSTRUCTION MACHINERY Co. Pvt. Ltd. TATA HITACHI Bengaluru

SYSTEM / Controller

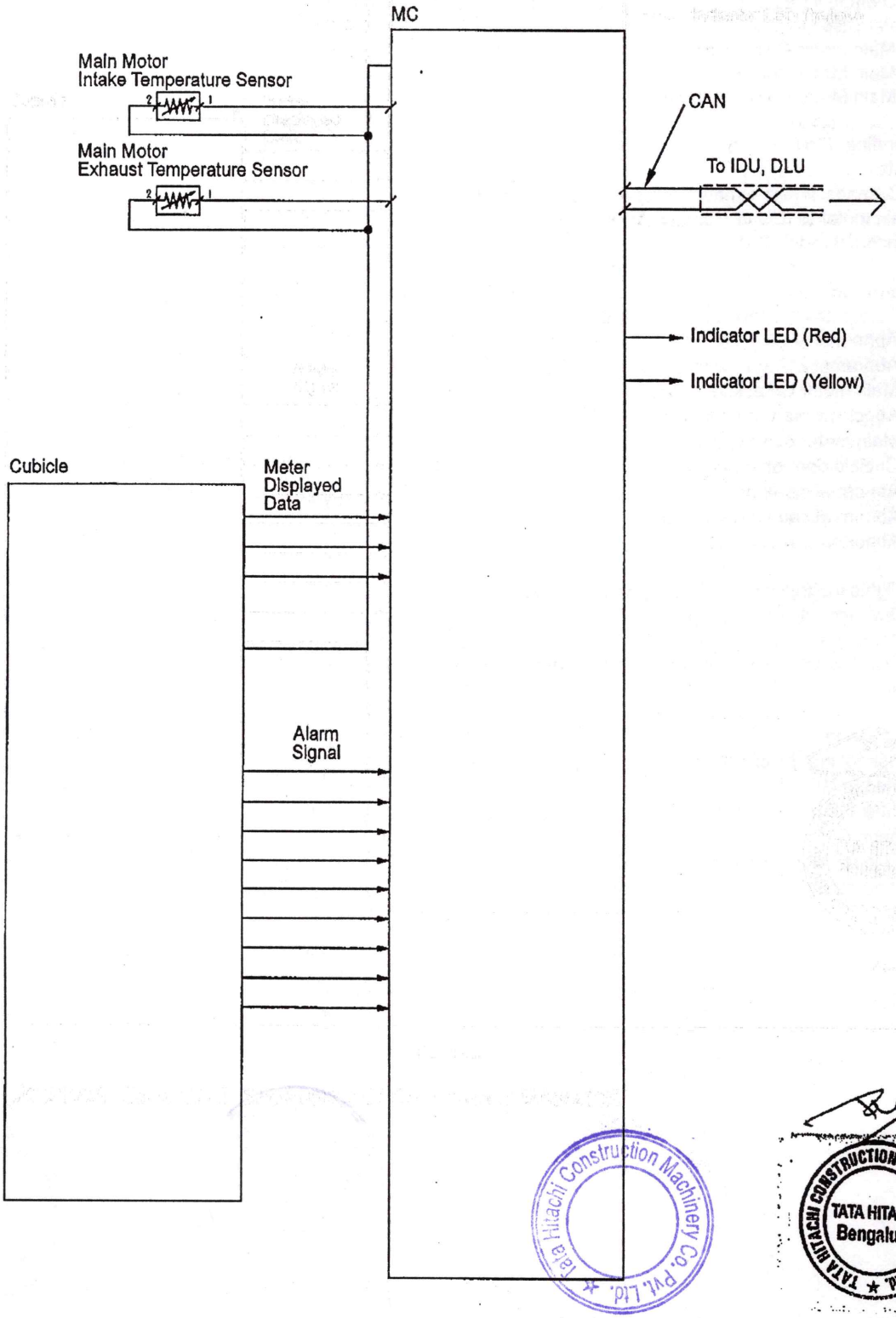

SYSTEM / Controller

ELU: Electric Lever Control Unit

Function Outline

- Pilot Shut-Off Selection
  When the pilot shut-off relay is shifted by the pilot shut-off lever limit switch, the pilot shut-off solenoid valve is operated or stopped.
  Therefore, pilot pressure oil is delivered or shut off to the control valve.

- Pilot Pressure Control by Control Valve
  ELU outputs the signal to the control valve in response to the signal from the electric control lever.
  The control valve delivers pilot pressure oil to the DQR (Dual Quick Response) valve in response to the signal.

Pump Control Function

- Pump Control
  ELU outputs the signal in response to the control lever stroke to the EHC valve for the main pump displacement angle control.
  The EHC valve for the main pump displacement angle control delivers pilot pressure oil to the pump regulator in response to the signal, and controls the pump displacement angle.

Tata Hitachi Construction Machinery Co. Pvt. Ltd.

TATA HITACHI CONSTRUCTION MACHINERY Co. Pvt. Ltd. TATA HITACHI Bengaluru

SYSTEM / Controller

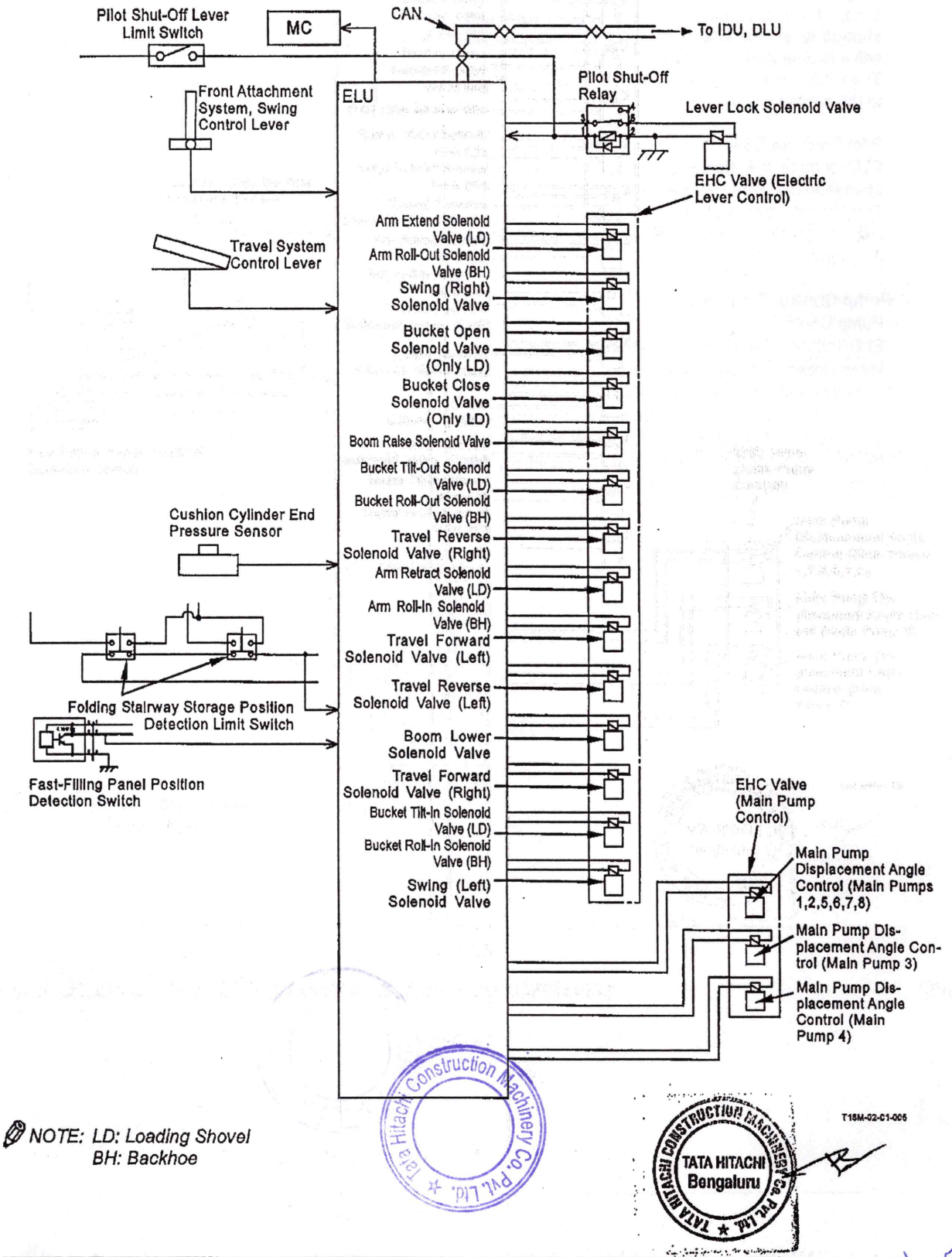

NOTE: LD: Loading Shovel
BH: Backhoe

Tata Hitachi Construction Machinery Co. Pvt. Ltd.
TATA HITACHI CONSTRUCTION MACHINERY CO. PVT. LTD. TATA HITACHI Bengaluru

SYSTEM / Controller

- Cushion Cylinder End Travel Limit Control
  When the cushion cylinder reaches its stroke end during travel operation, ELU receives the signal from the cushion cylinder end pressure sensor. ELU stops travel operation of the direction which the machine has traveled until then.
  When travel operation is reversed and the cushion cylinder leaves from the stroke end, travel operation can be done.

- Swing Stop Control
  ELU deactivates swing lever control signal in response to signal from the concentrated fast-filling panel position detection switch or the folding stairway storage position detection limit switch. Consequently, the swing operation stops.

SYSTEM / Controller

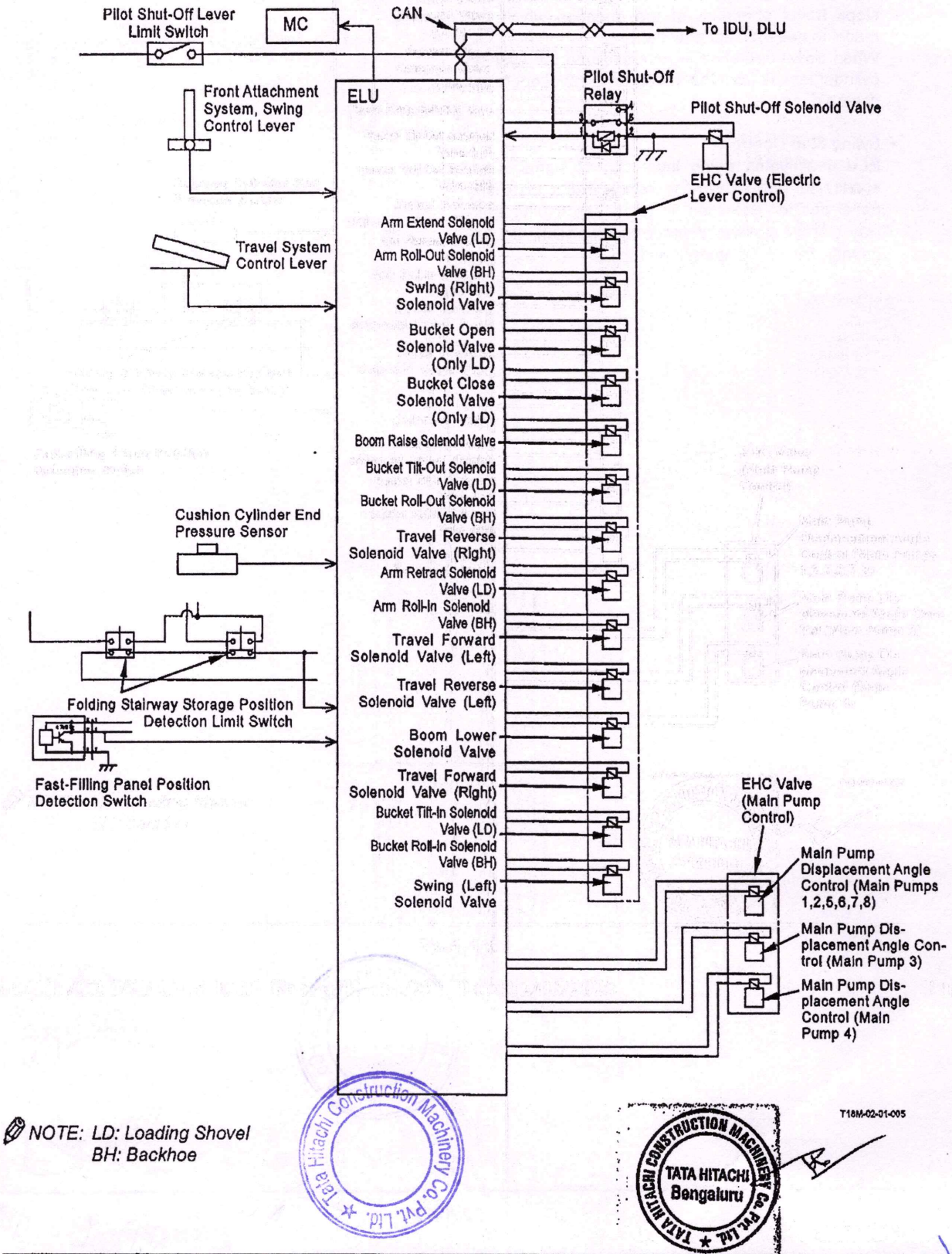

NOTE: LD: Loading Shovel
BH: Backhoe

T18M-02-01-005

SYSTEM / Controller

- Diagnosing
  Failure of the sensors connected to ELU is diagnosed and stick phenomena in the control solenoid valve is detected.
  When the stick signal from the control solenoid valve and the abnormal signal from the control lever/pedal are detected, the pilot shut-off solenoid valve is turned OFF and the operation is stopped automatically.
  Failure information is transmitted to DLU and IDU through CAN.
  DLU logs failure information.
  IDU outputs failure information on the display.

SYSTEM / Controller

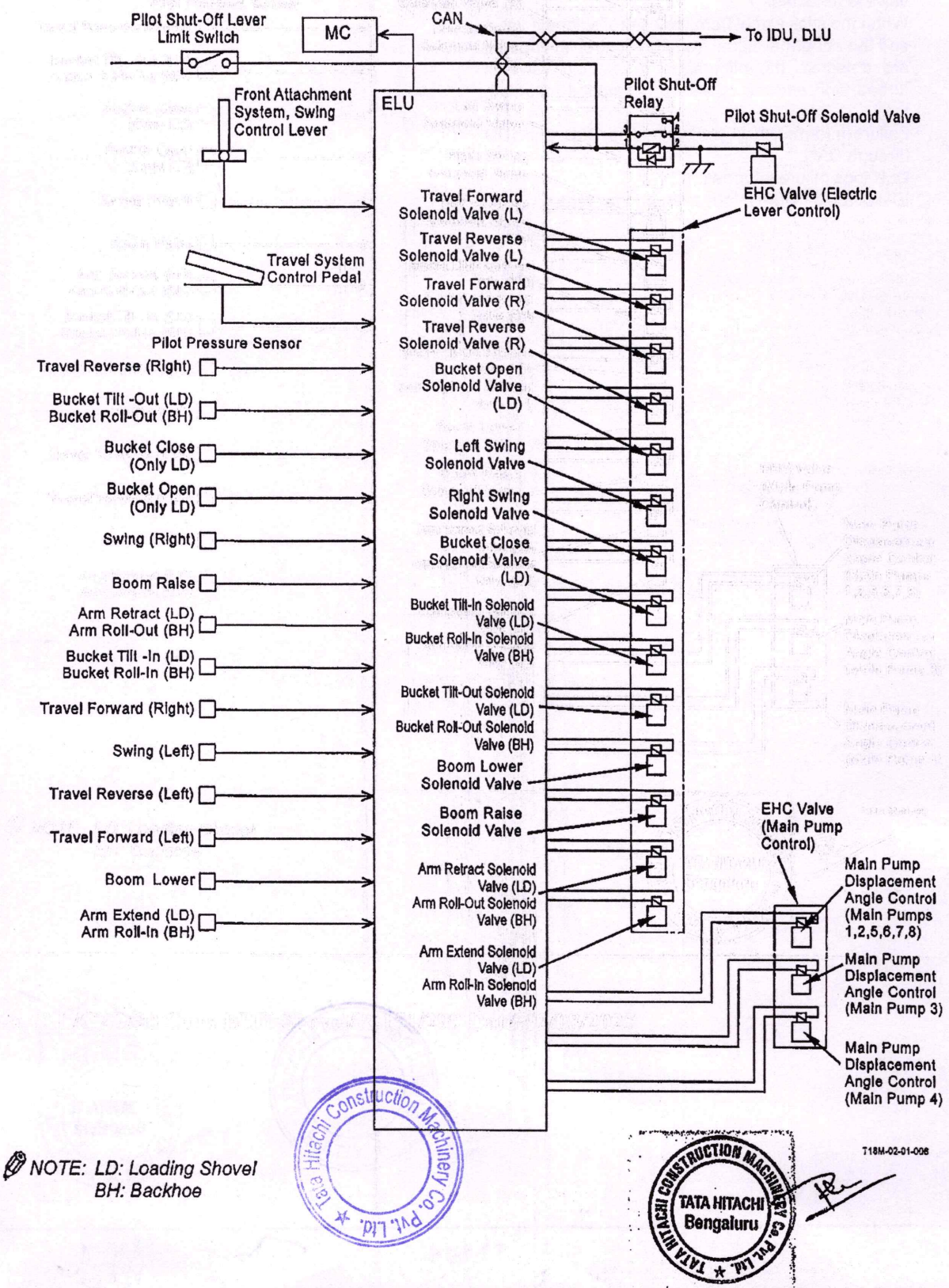

NOTE: LD: Loading Shovel
BH: Backhoe

Tata Hitachi Construction Machinery Co. Pvt. Ltd.

TATA HITACHI CONSTRUCTION MACHINERY Co. Pvt. Ltd. TATA HITACHI Bengaluru

SYSTEM / Controller

(Blank)

SYSTEM / Controller

IDU: Information Display Unit

Function Outline
IDU is designed for data entry by the keypad, and data output on the display.

- Displaying Meters
  IDU receives meter data from the controllers (MC and DLU) through CAN.
  IDU outputs meter data on the display.

- Display Items
  1- Hydraulic Oil Temperature
  2- Main Motor Coil Temperature
  3- Main Motor Current
  4- Main Motor Voltage
  5- Battery Voltage
  6- Atmospheric Temperature

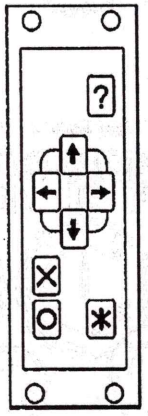

Keypad

T19G-02-01-108

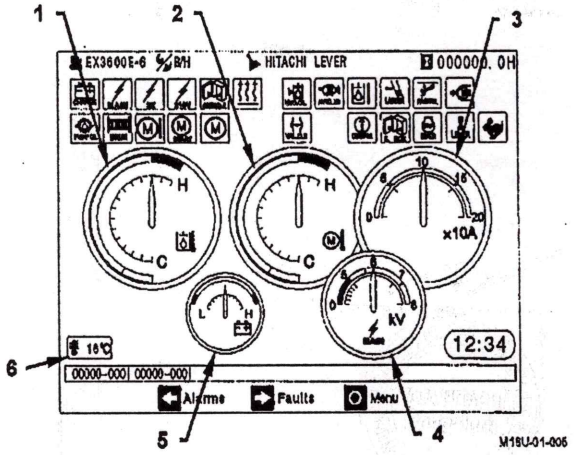

M19U-01-005

Display

SYSTEM / Controller

Display Data Flow

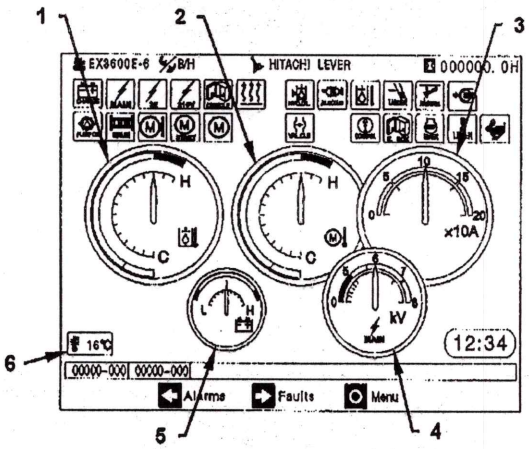

M16U-01-005

1- Hydraulic Oil Temperature
Hydraulic Oil Temperature Sensor → MC → CAN → IDU

2- Main Motor Coil Temperature
Cubicle → MC → CAN → IDU

3- Main Motor Current
Cubicle → MC → Ke-CAN → IDU

4- Main Motor Voltage
Cubicle → MC → Ke-CAN → IDU

5- Battery Voltage
Main Power Source → DLU → Ke-CAN → IDU

6- Atmospheric Temperature
Atmospheric Temperature Sensor → DLU → Ke-CAN → IDU

Tata Hitachi Construction Machinery Co. Pvt. Ltd.

TATA HITACHI CONSTRUCTION MACHINERY Co. Pvt. Ltd. TATA HITACHI Bengaluru

SYSTEM / Controller

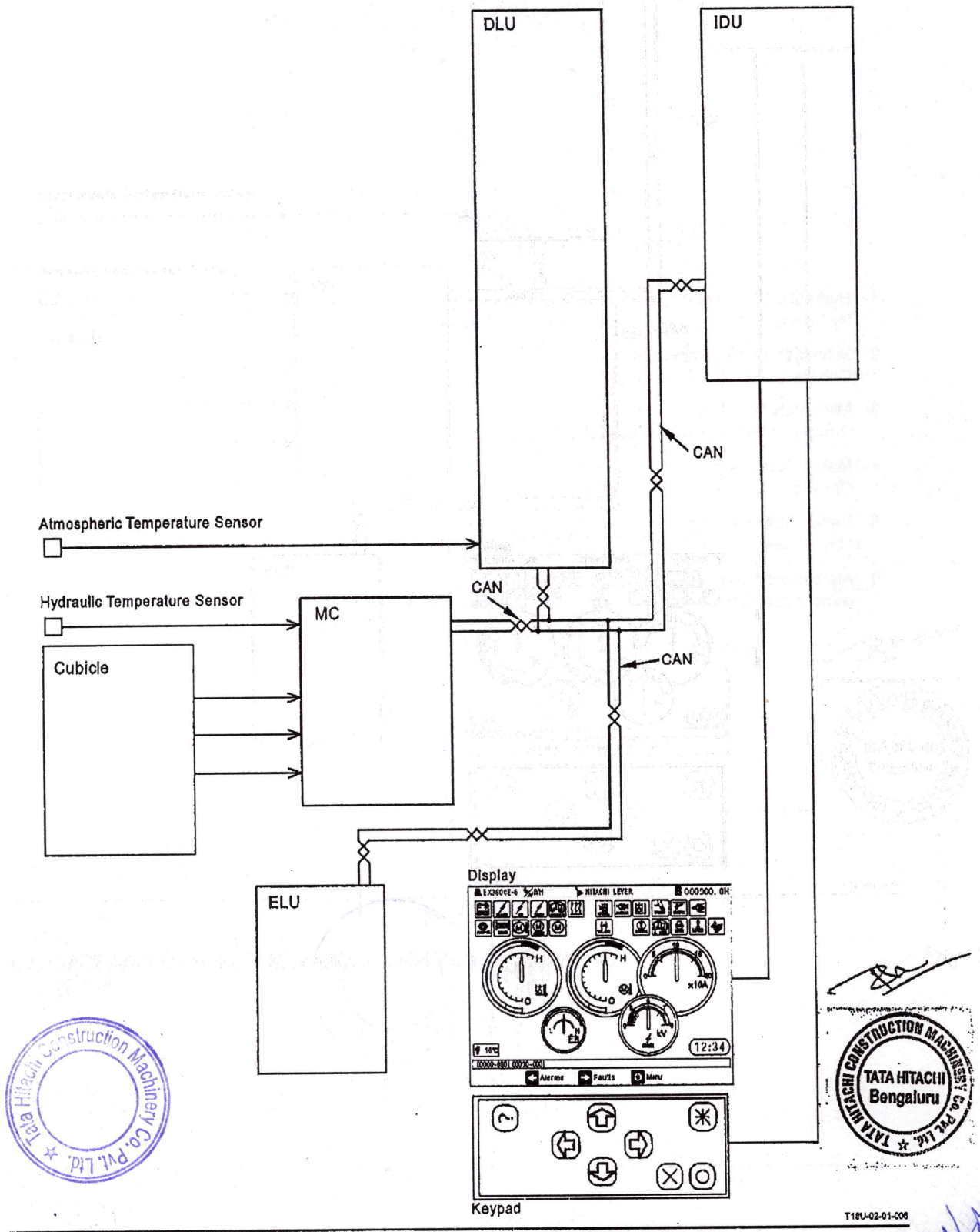

SYSTEM / Controller

- Fault Code Display
  IDU displays the fault codes on the display in response to the abnormal signal from the controllers through CAN.

- Failure Information Display
  Failure information is displayed on the monitor display by entering data of the keypad connected to IDU.

- Buzzer Output
  IDU sounds the buzzer in response to the specific alarm signal from the controllers through CAN.

- Status Display
  The date on temperature and pressure in response to the signal from the controllers through CAN are displayed on the display.

- Automatic Snapshot Display
  At the occurrence of warning, the data on temperature and pressure for five minutes before warning and one minute after warning are logged automatically.
  The log can be later checked by using the keypad.

- Manual Snapshot Display
  Any data on temperature and pressure can be checking manually when necessary. The data can be logged and checked later.

- Maintenance History
  Maintenance warning output
  The warnings on the replacement of air filters, and hydraulic oil are output on the display at every preset interval.

- Maintenance History Output/Maintenance Record
  The history of replacement, including hour meter reading, quantity of maintenance times, and remaining hours to next maintenance is displayed.
  As a list of maintenance items is displayed, select the concerned item and record the replacement data.

  Setting Intervals and Warning ON/OFF
  The intervals of replacement items are individually set.
  The warnings ON/OFF of all replacement items are set at a time.

- Life Data Display
  IDU receives cumulative information, including cumulative main motor running hours and machine operating hours from DLU through CAN, and displays it on the display.

- Property (Machine Information) Display
  The property of the machine, including controller configuration, hardware, and software (version) is displayed.

Hitachi Construction Machinery Co. Pvt. Ltd.

TATA HITACHI CONSTRUCTION MACHINERY Co. PVT. LTD. TATA HITACHI Bengaluru

SYSTEM / Controller

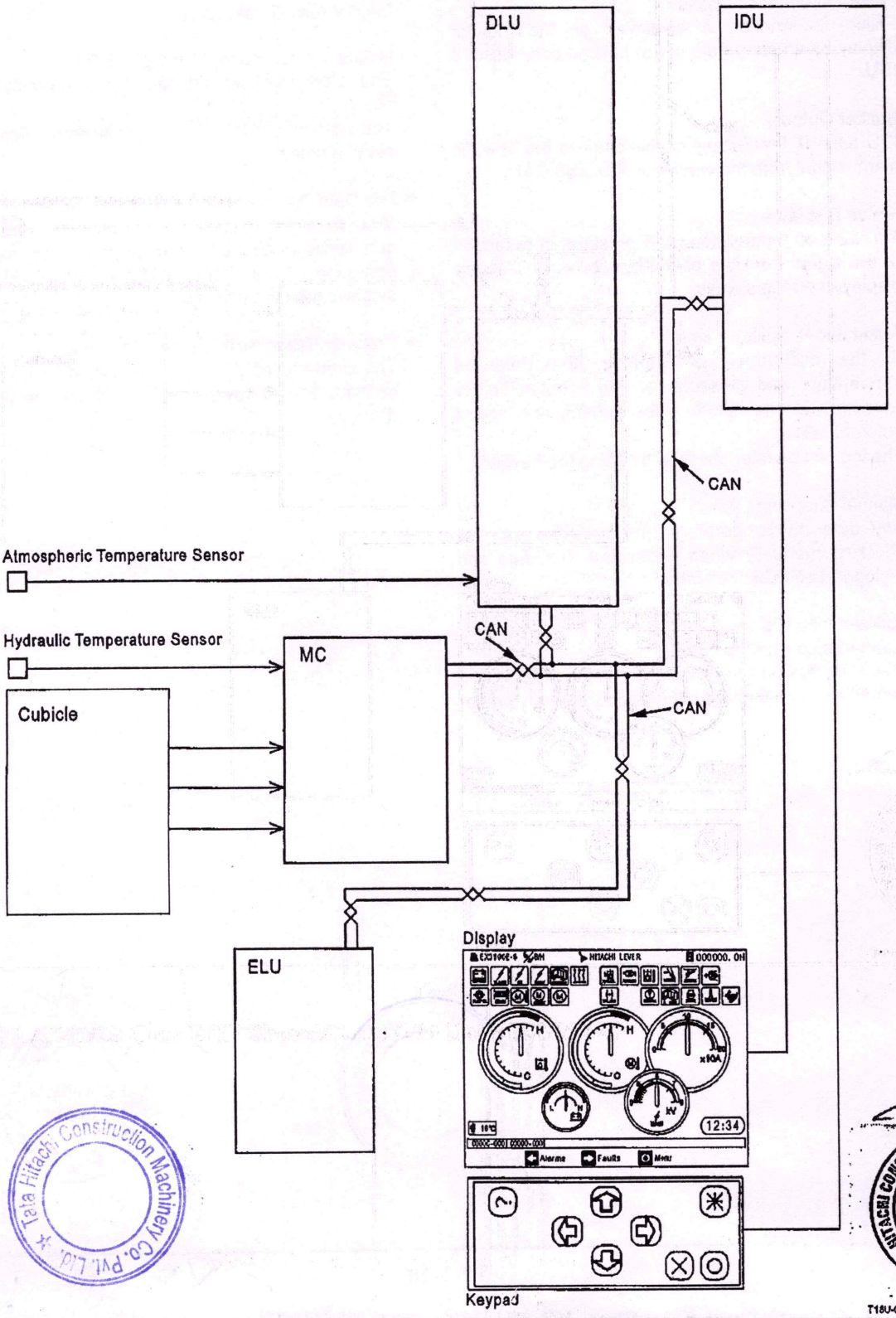

SYSTEM / Controller

- Processing and Check When Starting
  IDU processes the following at the start of operation.
  - Memory check
  - Buzzer check
  - System configuration check: Check of the controllers connected to the CAN network
  - Level check: Check of hydraulic oil level
  - Electric control lever check: Check of control levers for neutral position, model name setting, front attachment setting, and multi lever setting
  - Maintenance warning: Warning of the items required to be maintained

- Other Settings
  - Maintenance setting: Setting of replacement interval and hours of consumable parts
  - Snapshot setting: Delete all of the recorded data for manual snapshot
  - Time setting: Setting of world standard time, local standard time, and time difference
  - Illumination OFF delay time setting: Setting of the time until the working light comes off from the key switch OFF

Tata Hitachi Construction Machinery Co. Pvt. Ltd.

TATA HITACHI CONSTRUCTION MACHINERY Co. Pvt. Ltd. TATA HITACHI Bengaluru

SYSTEM / Controller

(Blank)

SYSTEM / Controller

DLU: Data Logging Unit

Function Outline

- Monitor System
  DLU monitors communication with connected units, and logs abnormality.

- Operating Hour Control
  DLU incorporates the internal clock and the GPS receiver.
  The internal clock is corrected to the standard time, by using the GPS receiver.

- Warning Detection
  Warning information with stamped times is logged.

- Operating Condition Detection
  Operating data is processed every 30 minutes.

- Snapshot
  At occurrence of warning, operating data every one second for five minutes before warning and one minute after warning is logged.
  Log only one type of snapshot data a day even when the same warning occurs several times a day.

- Service Tool Communication
  The communication with Palm or a personal computer can be done.

- Parameters Setting
  The parameters in DLU are set by Palm.

- MMS Communication (Optional)
  Communication with the mine management system -- MMS (Modular Mining System) can be done.
  Warning information is sent to MMS in real time at the occurrence of warning.

- Satellite Communication (ORBCOMM) (Optional)
  The starting and finishing times of daily data can be changed by using Palm or the display in the cab.
  Log data from DLU is transmitted to the ORBCOMM terminal.

Tata Hitachi Construction Machinery Co. Pvt. Ltd.

TATA HITACHI CONSTRUCTION MACHINERY CO. PVT. Ltd. TATA HITACHI Bengaluru

SYSTEM / Controller

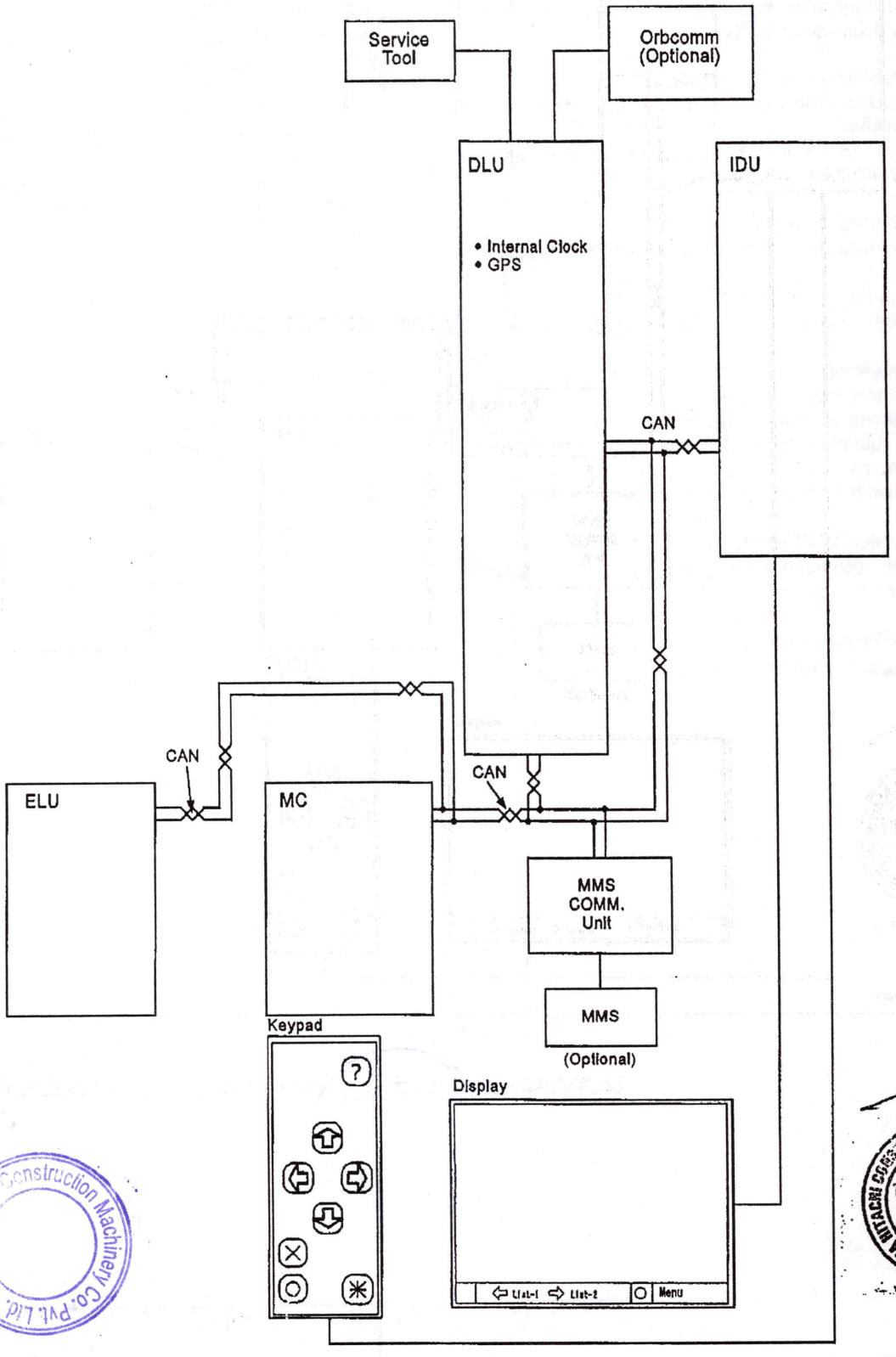

SYSTEM / Controller

CSU: Contamination Sensing Unit

Function Outline

CSU senses the amount of contaminant (metal particles) by using the contamination sensors provided in the drain circuits for the main pumps, the swing motor, and the travel motor.

CSU sends the detection signals from all contamination sensors to CAN at a cycle of one second.

If any resistance in contamination sensors is lowered than the specified level, CSU lights the indicator LED (yellow).

IDU receives this signal and displays the warning on the display.

At the same time, DLU logs it.

Tata Hitachi Construction Machinery Co. Pvt. Ltd.

TATA HITACHI CONSTRUCTION MACHINERY CO. PVT. LTD. TATA HITACHI Bengaluru

SYSTEM / Controller

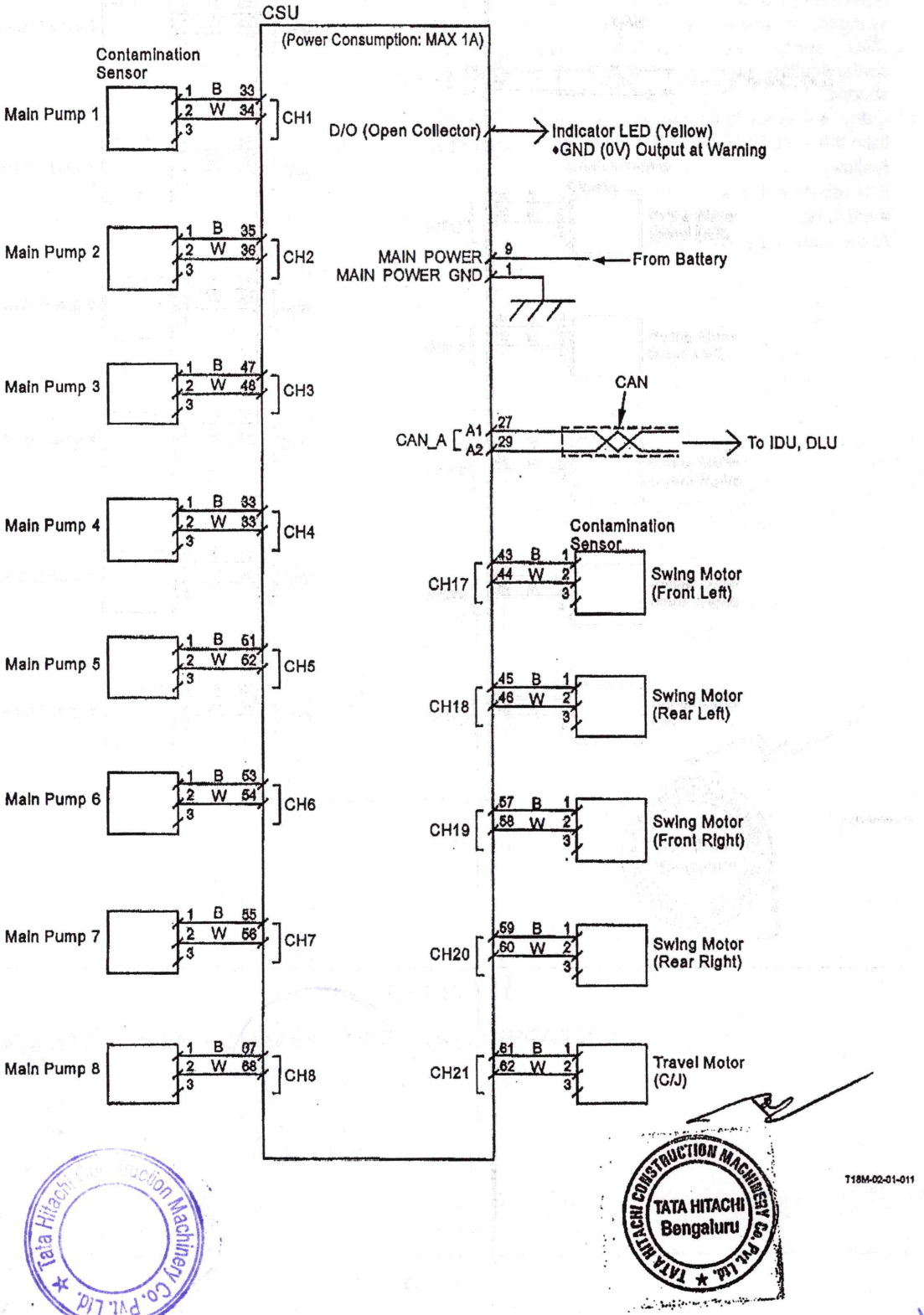

Tata Hitachi Construction Machinery Co. Pvt. Ltd.
TATA HITACHI CONSTRUCTION MACHINERY CO. PVT. LTD. TATA HITACHI Bengaluru

SYSTEM / Controller

HMU: Hydraulic System Monitoring Unit (Pump/Swing Motor Drain Pressure Monitoring Unit)

Function Outline

HMU monitors hydraulic drain pressure by using the drain pressure sensors provided in the drain circuits for the main pumps, and four swing motors.

If the peak drain pressure exceeds the specified level and its frequency exceeds the specified times, HMU sends the signal with the valves of the temperature sensor and the pressure sensor to IDU and DLU through CAN. At the same time, DLU logs the frequency of abnormality.

IDU display with the valves of the temperature sensor and the pressure sensor through CAN on the monitor.

Tata Hitachi Construction Machinery Co. Pvt. Ltd.

TATA HITACHI CONSTRUCTION MACHINERY Co. PVT. LTD. ☆ TATA HITACHI Bengaluru

SYSTEM / Controller

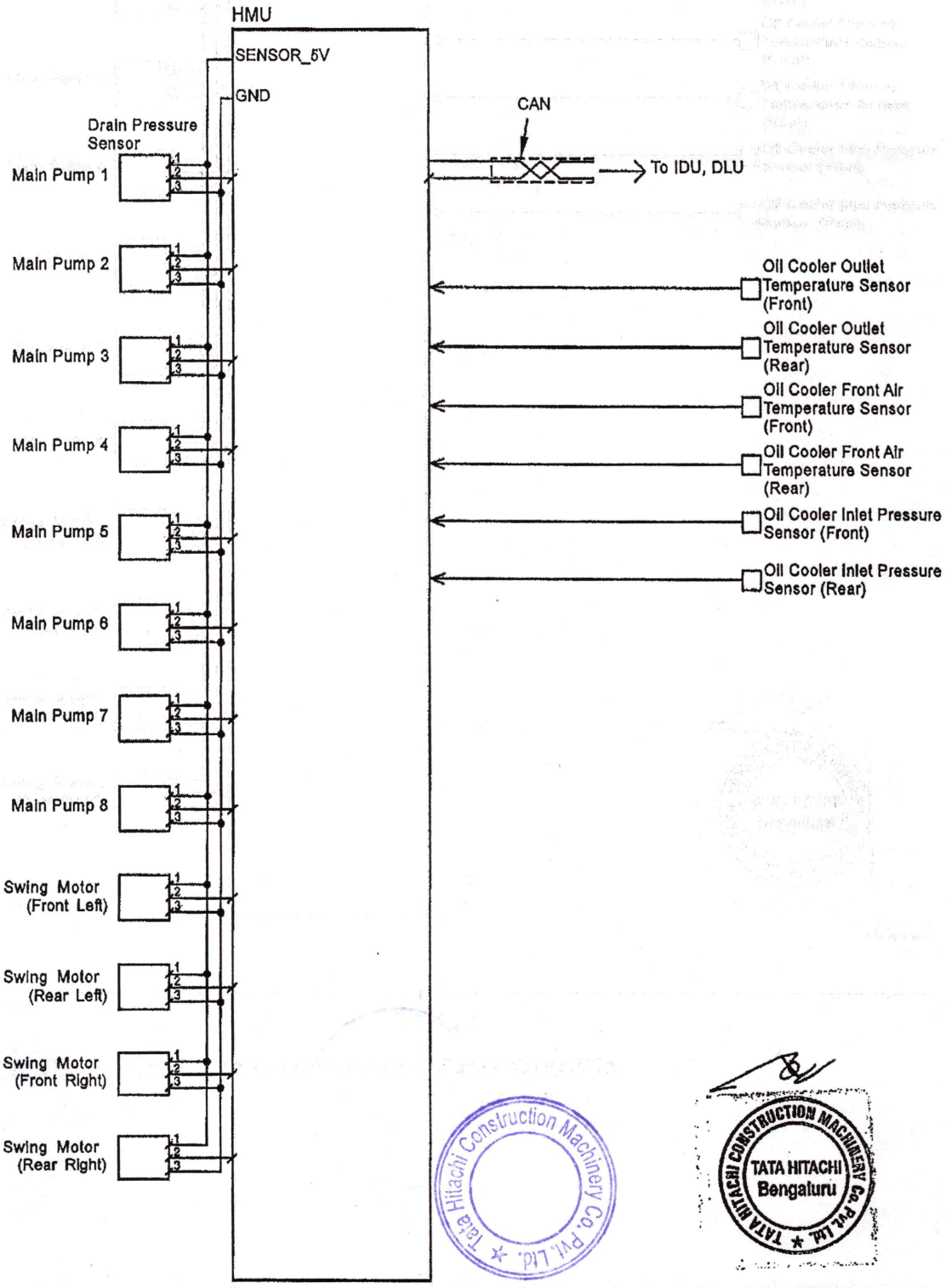

T18M-02-01-012

SYSTEM / Controller

(Blank)

SYSTEM / Control System

OUTLINE

Signals from various sensors and switches enter MC (Main Controller).
MC process the signals and activate the solenoid valves and the relays so that the oil cooler fan motor and the wipers are controlled.
In addition, travel mode control as well as swing stop control (while lowering the folding stairway or operating the fast-filling system) are carried out by the electric and hydraulic combined circuits.

MC

Input	Output	Control
Hydraulic oil temperature sensor	Oil cooler fan speed selection solenoid valves	Oil cooler fan motor speed control
Wiper switch Interval switch	Wiper relay 1 Wiper relay 3 Wiper relay 4	Wiper control

Tata Hitachi Construction Machinery Co. Pvt. Ltd.

TATA HITACHI CONSTRUCTION MACHINERY CO. PVT. LTD. TATA HITACHI Bengaluru

FAST-FILLING PANEL LOWER CONTROL

Purpose: The fast-filling panel lower control prevents the fast-filling panel from lowering for safety while the pilot shut-off lever is in the ON (lever control available) position. When the fast-filling panel is lowered, swing cannot be operated. Refer to Swing Stop Control.

Operation:

- Pilot shut-off lever: OFF

1. When the pilot shut-off lever limit switch is OFF, MC connects the ground circuit of the fast-filling relay.
2. Under this condition, when the fast-filling switch is turned ON, current from MC excites the fast-filling relay.
3. As current from the battery flows to the fast-filling solenoid valve through the fast-filling relay, the fast-filling solenoid valve is operated.
4. Pilot pressure oil from the fast-filling solenoid valve flows to the lift cylinder bottom side and lowers the fast-filling panel.
5. When the fast-filling panel is lowered and reaches out of the detection range of the position detection switch, MC lights the alarm LED (red), and sends signals to IDU through the CAN communication, and displays the warning on the monitor.
6. At the same time, MC stops the voltage signal to ELU, and the swing function is not available. (Refer to Swing Stop Control.)

- Pilot shut-off lever: ON

1. When the pilot shut-off lever limit switch is ON, MC blocks the ground circuit of the fast-filling relay.
2. Even if the fast-filling switch is turned ON under this condition, the fast-filling relay is not excited and the fast-filling panel is prevented from lowering.

IMPORTANT: Even if the pilot shut-off lever limit switch is ON while the fast-filling panel is lowering or when lowered fully, MC operates the fast-filling solenoid valve continuously.
At the same time, MC sends signals to IDU through the CAN communication and sounds the buzzer.

Tata Hitachi Construction Machinery Co. Pvt. Ltd.

TATA HITACHI CONSTRUCTION MACHINERY Co. PVT. LTD. ★ TATA HITACHI Bengaluru

SYSTEM / Control System

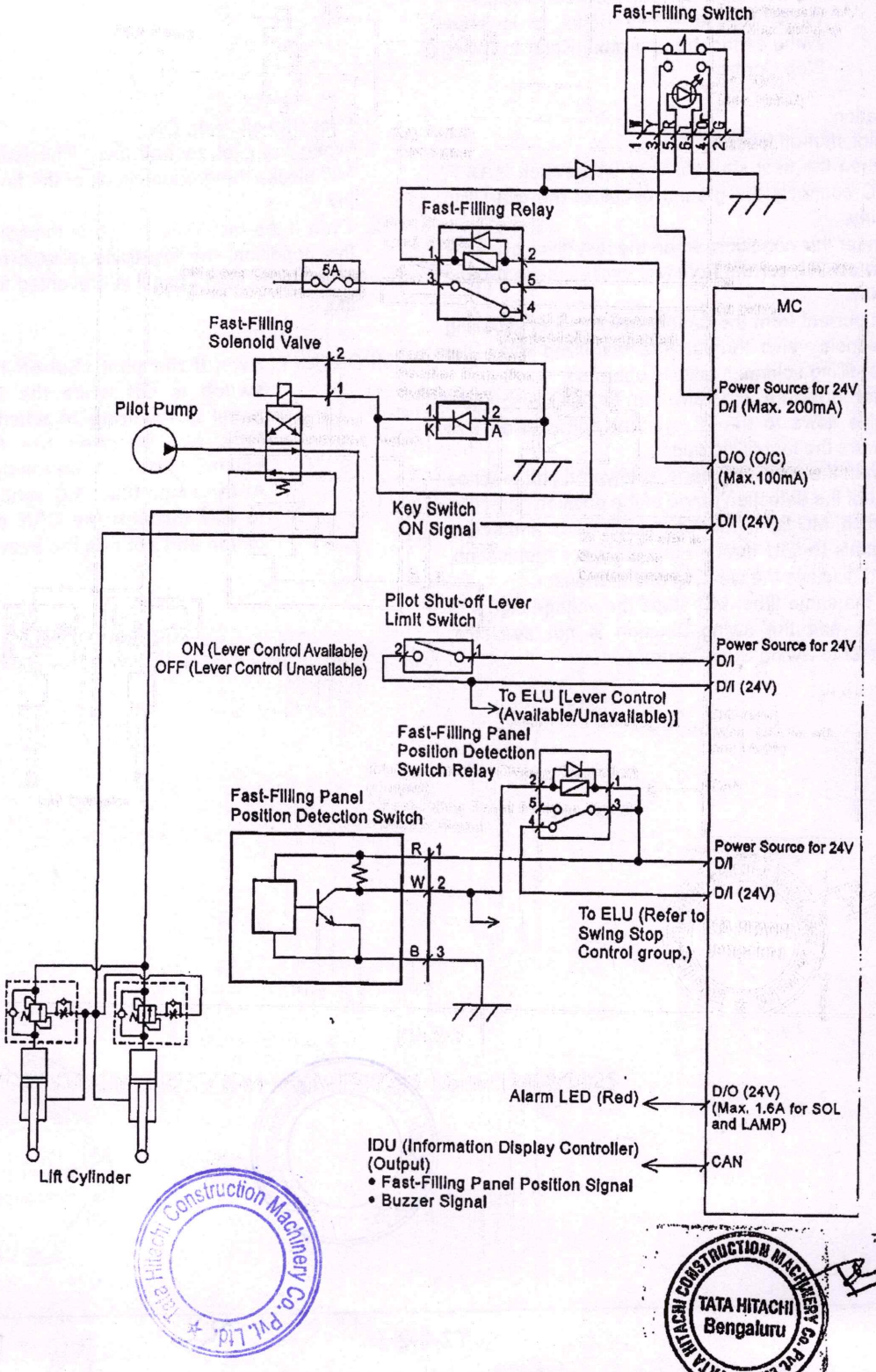

Tata Hitachi Construction Machinery Co. Pvt. Ltd.
TATA HITACHI CONSTRUCTION MACHINERY CO. PVT. LTD. TATA HITACHI Bengaluru

SYSTEM / Control System

FOLDING STAIRWAY CONTROL

Purpose: This controls not to operate the folding stairway when the pilot shut-off lever is ON (lever control available) position for safety.
In addition, before the folding stairway cylinder reaches the stroke end, this decreases operating speed in order to protect the folding stairway.

Operation:

- Extending Folding Stairway

1. When the pilot shut-off switch is OFF and the extend switch is pushed, the ground circuits in folding stairway relays 2 and 3 are connected.
2. As folding stairway relays 2 and 3 are excited, folding stairway motors 1 and 2 are also excited and the battery power operates folding stairway pump units 1 and 2.
3. At the same time, Sol. b in folding stairway solenoid valve 1 is excited and the spool is shifted.

NOTE: Even if current flows to Sol. a, as the ground is not connected (electric potential difference: 0), Sol. a is not excited.

4. When pressure oil from folding stairway pump units 1 and 2 flows to the rod side of the folding stairway cylinder through orifice A and folding stairway solenoid valve 3 so that the folding stairway is extended.
5. While the folding stairway is extended, limit switch 2 (extend control for stroke end) is turned ON and connects the ground circuit of folding stairway solenoid valve 3.
6. Therefore, as folding stairway solenoid valve 3 is operated and the spool is moved, the hydraulic circuit is blocked.
7. As pressure oil from folding stairway pump units 1 and 2 flows to the folding stairway cylinder through only orifice A, operating speed of the folding stairway cylinder becomes slow.
8. When extension of the folding stairway is completed, limit switch 1 (extend detect for stroke end) is turned OFF and blocks the ground circuits of folding stairway relays 2 and 3, and folding stairway solenoid valve 1 and 3.
9. As current from folding stairway relay 1 is blocked, folding stairway solenoid valves 1 and 3 stop.
10. As current from folding stairway relays 2 and 3 is blocked, folding stairway motors 1 and 2 stop so that folding stairway pumps 1 and 2 stop.

Tata Hitachi Construction Machinery Co. Pvt. Ltd.

TATA HITACHI CONSTRUCTION MACHINERY CO. PVT. LTD. ★ TATA HITACHI Bengaluru

SYSTEM / Control System

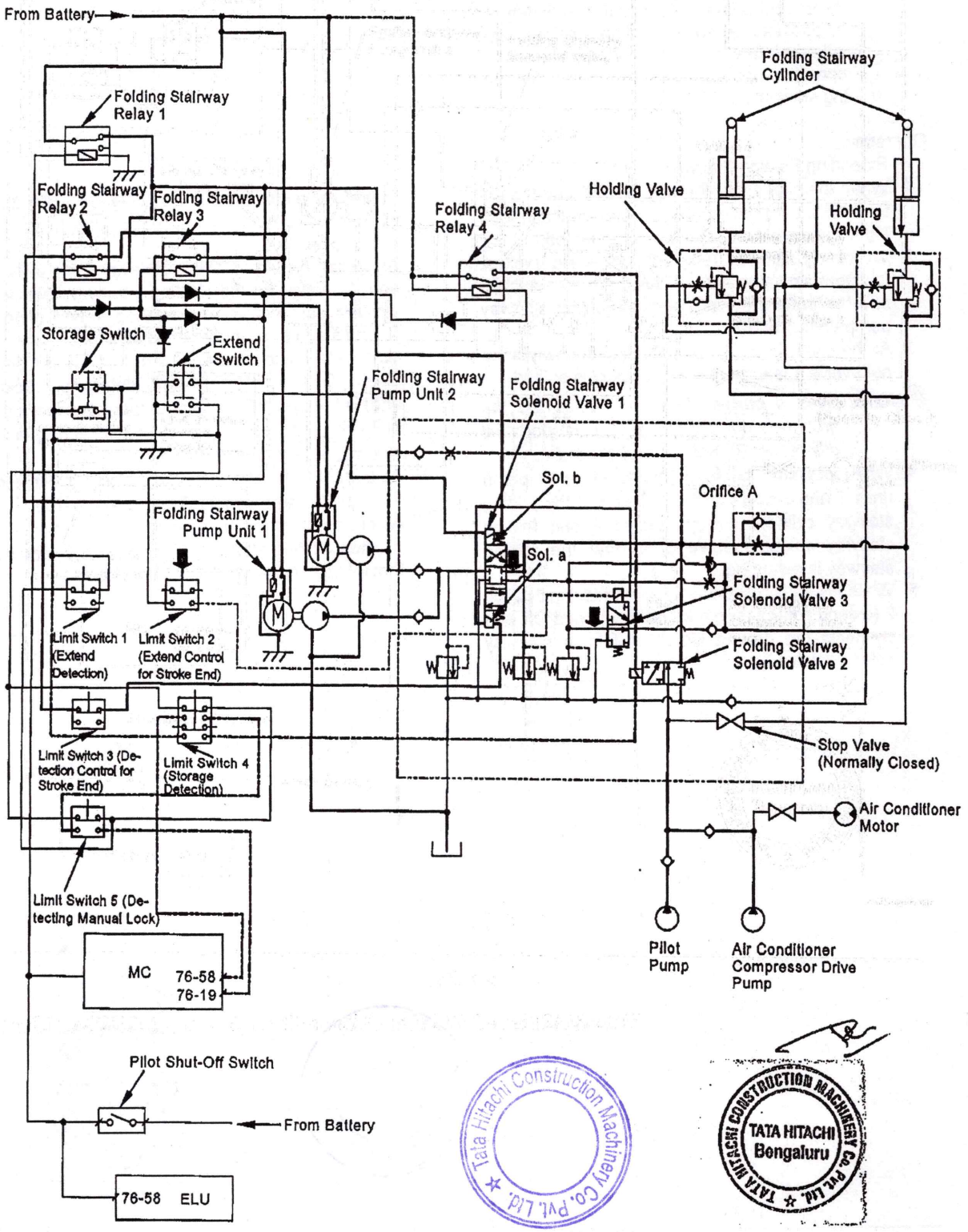

SYSTEM / Control System

• Storage of Folding Stairway

1. When the pilot shut-off switch is OFF and the storage switch is pushed, the ground circuits in folding stairway relays 2 and 3 are connected.
2. As folding stairway relays 2 and 3 are excited, folding stairway motors 1 and 2 are also excited and the battery power operates folding stairway pump units 1 and 2.
3. At the same time, Sol. a in folding stairway solenoid valve 1 is excited and the spool is shifted.

NOTE: Even if current flows to Sol. b, as the ground is not connected (electric potential difference: 0), Sol. b is not excited.

4. When pressure oil from folding stairway pump units 1 and 2 flows to the bottom side of the folding stairway cylinder so that the folding stairway is stored.
5. While the folding stairway is stored partially, limit switch 3 (detection control for stroke end) is turned ON and Sol. a of folding stairway solenoid valve 1 is stopped excited.
6. Therefore, as folding stairway solenoid valve 1 is neutral, the hydraulic circuit is blocked.
7. As pressure oil from only folding stairway pump unit 2 flows to the folding stairway cylinder, operating speed of the folding stairway cylinder becomes slow.
8. When the folding stairway is stored completely, limit switch 4 (storage detection) and limit switch 5 (detecting manual lock) are turned ON and current flows to two terminals in MC.
9. Therefore, MC releases the swing operation lock.
10. At the same time, folding stairway solenoid valve 2 is also excited and the spool is moved.
11. As pressure oil from the pilot pump and the air conditioner compressor drive pump is supplied to the bottom side of the folding stairway cylinder and the pushing force of the folding stairway cylinder increases, the folding stairway is stored stably.

NOTE: While limit switch 4 (storage detection) is ON, when the main motor starts, folding stairway solenoid valve 2 is excited automatically.
At the same time, pressure oil from the pilot pump and the air conditioner compressor drive pump is supplied to the bottom side of the folding stairway cylinder. Even if the machine moves, the folding stairway is fixed and does not move.

Tata Hitachi Construction Machinery Co. Pvt. Ltd.

TATA HITACHI CONSTRUCTION MACHINERY Co. Pvt. Ltd. TATA HITACHI Bengaluru

SYSTEM / Control System

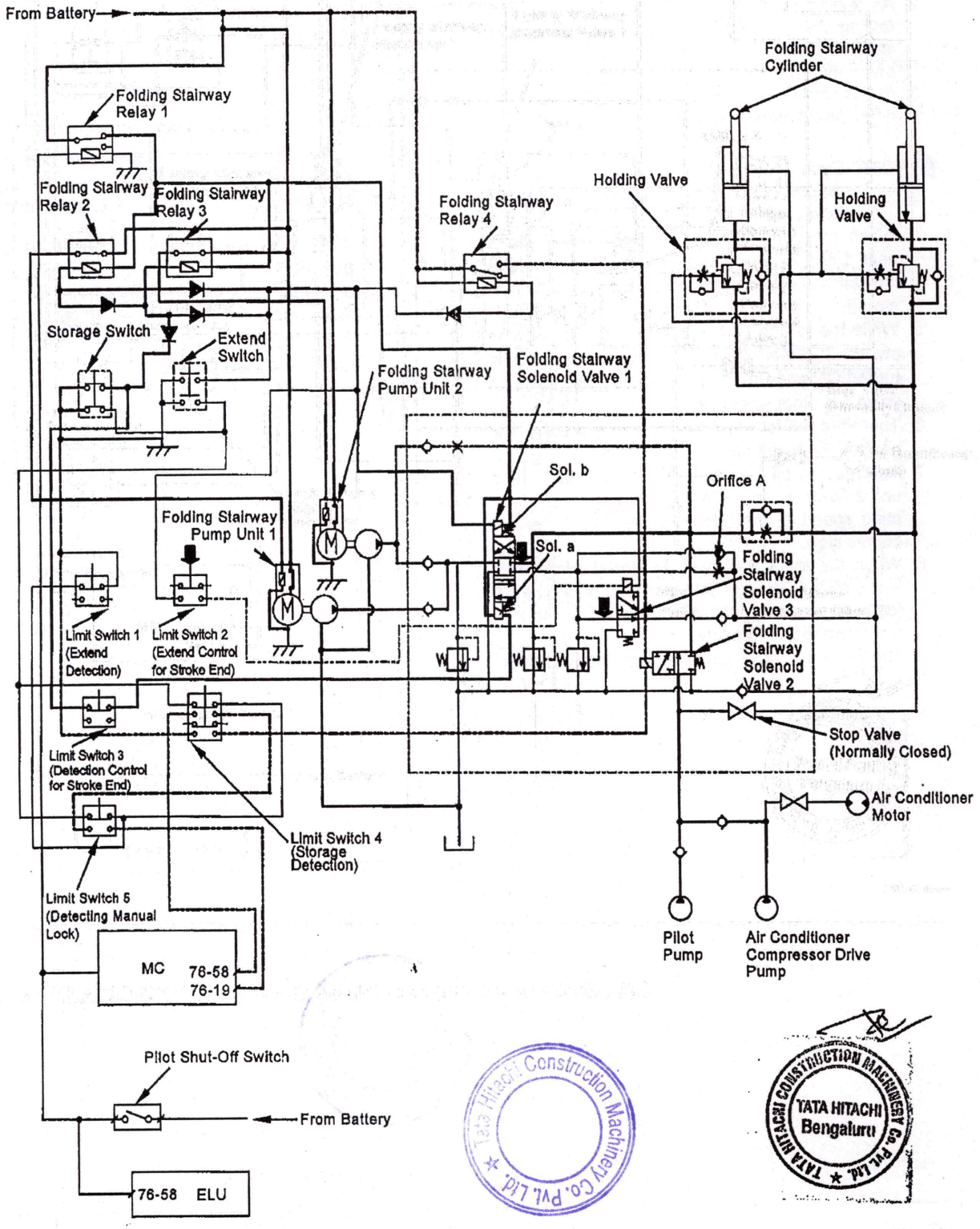

SYSTEM / Control System

AUTO-LUBRICATION CONTROL

Purpose: This automatically applies grease to the front attachment joint pins, the swing bearing, and the center joint at preset intervals.

Operation:

- Auto-Lubrication

1. When the auto-lubrication switch is set to the AUTO position, current from terminal 76-13 of MC is grounded through the auto-lubrication switch. MC recognizes that the auto-lubrication switch is in the AUTO position.
2. Current from terminal 48-18 of MC flows to auto-lubrication solenoid valve at intervals preset by the auto lubrication interval switch, and auto-lubrication solenoid valve 1 is operated.
3. Pressure oil from the pilot pump is supplied to the vent valve and the grease pump drive motor through the pressure reducing valve so that the grease pump is operated.
4. As pilot pressure is routed to the vent valve, the vent valve is closed the return circuit from the grease pump to the grease tank is blocked. Therefore, grease is applied to the front attachment lubrication circuit.
5. Grease pressure in the front attachment lubrication circuit is routed to pressure switch 1. When grease pressure in the front attachment lubrication circuit increases beyond the set pressure (17.7 MPa, (2573 psi)) set by pressure switch 1, pressure switch 1 is turned ON. Terminal 48-38 of MC is grounded through pressure switch 1. MC detects that grease pressure in the front attachment lubrication circuit increases.
6. MC lights the alarm LED (red), and sends signals to IDU through the CAN communication so that the warning is displayed on the monitor.
7. MC operates the auto-lubrication solenoid valve for 150 seconds at the preset intervals for intermittent lubrication.

Tata Hitachi Construction Machinery Co. Pvt. Ltd.

TATA HITACHI CONSTRUCTION MACHINERY Co. Pvt. Ltd. ★ TATA HITACHI Bengaluru

SYSTEM / Control System

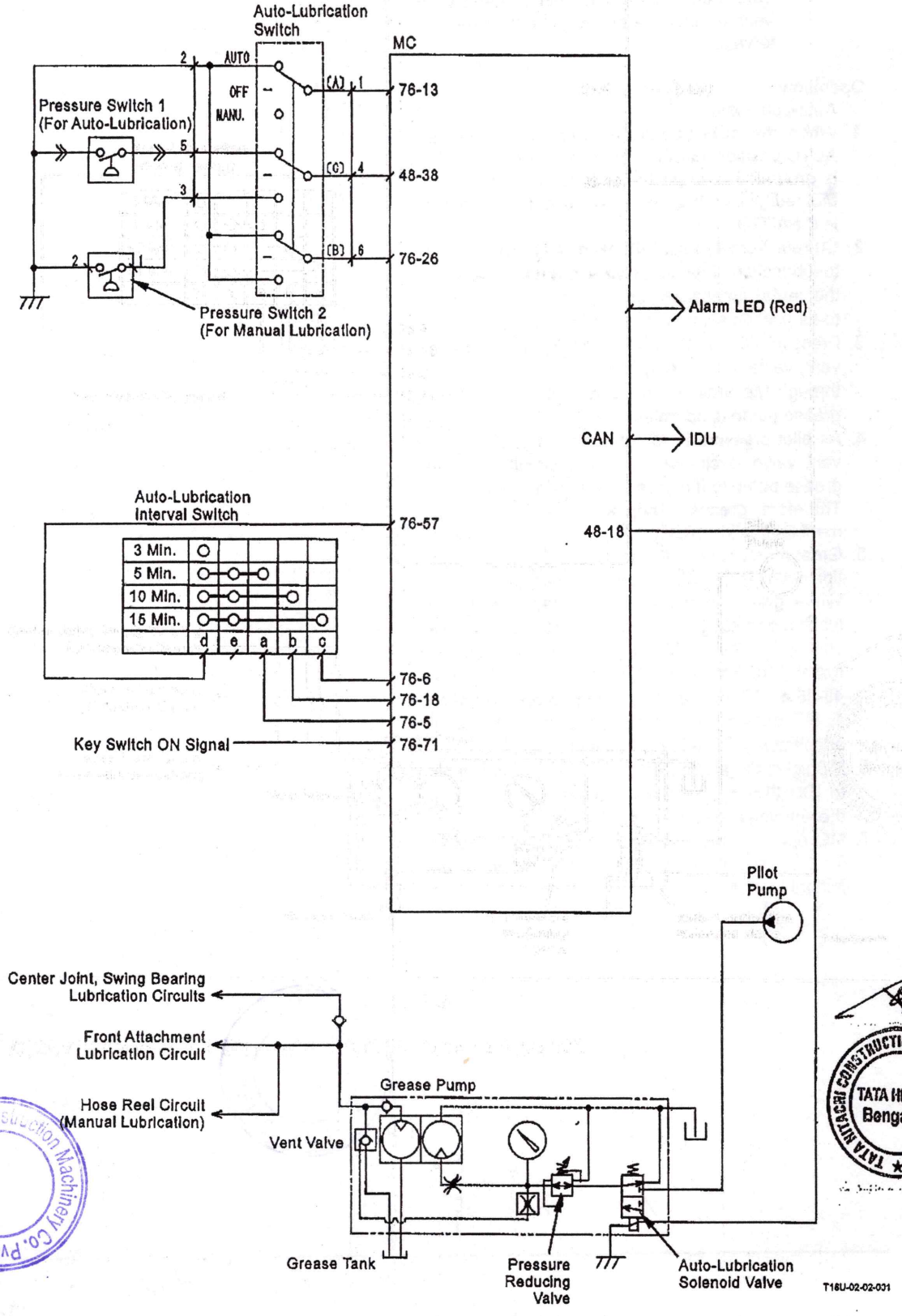

Tata Hitachi Construction Machinery Co. Pvt. Ltd.
TATA HITACHI CONSTRUCTION MACHINERY Co. Pvt. Ltd. TATA HITACHI Bengaluru

SYSTEM / Control System

- Manual Lubrication
  1. In manual lubrication mode, when the auto-lubrication switch is set to the MANUAL position, MC keeps auto-lubrication solenoid valve ON. This causes the grease pump to discharges grease and allows the grease gun to apply grease.
  2. Pressure switch 2 checks if manual lubrication is made normally. When lubrication circuit pressure increases beyond 23.5 MPa (3416 psi), pressure switch 2 is turned ON.
  3. Current from terminal 48-38 of MC is grounded through pressure switch 2 and MC detects abnormality.
  4. Current from terminal 48-18 of MC is stopped, auto lubrication solenoid valve is turned OFF, and the grease pump is stopped.

NOTE: In manual lubrication mode, the alarm LED (red) is kept ON, and the warning is displayed on the monitor at all times.
When a grease gun is not used, the grease pump is not operated as pressure in the lubrication circuit increases.

Tata Hitachi Construction Machinery Co. Pvt. Ltd.

TATA HITACHI CONSTRUCTION MACHINERY CO. PVT. LTD. ★ TATA HITACHI Bengaluru

SYSTEM / Control System

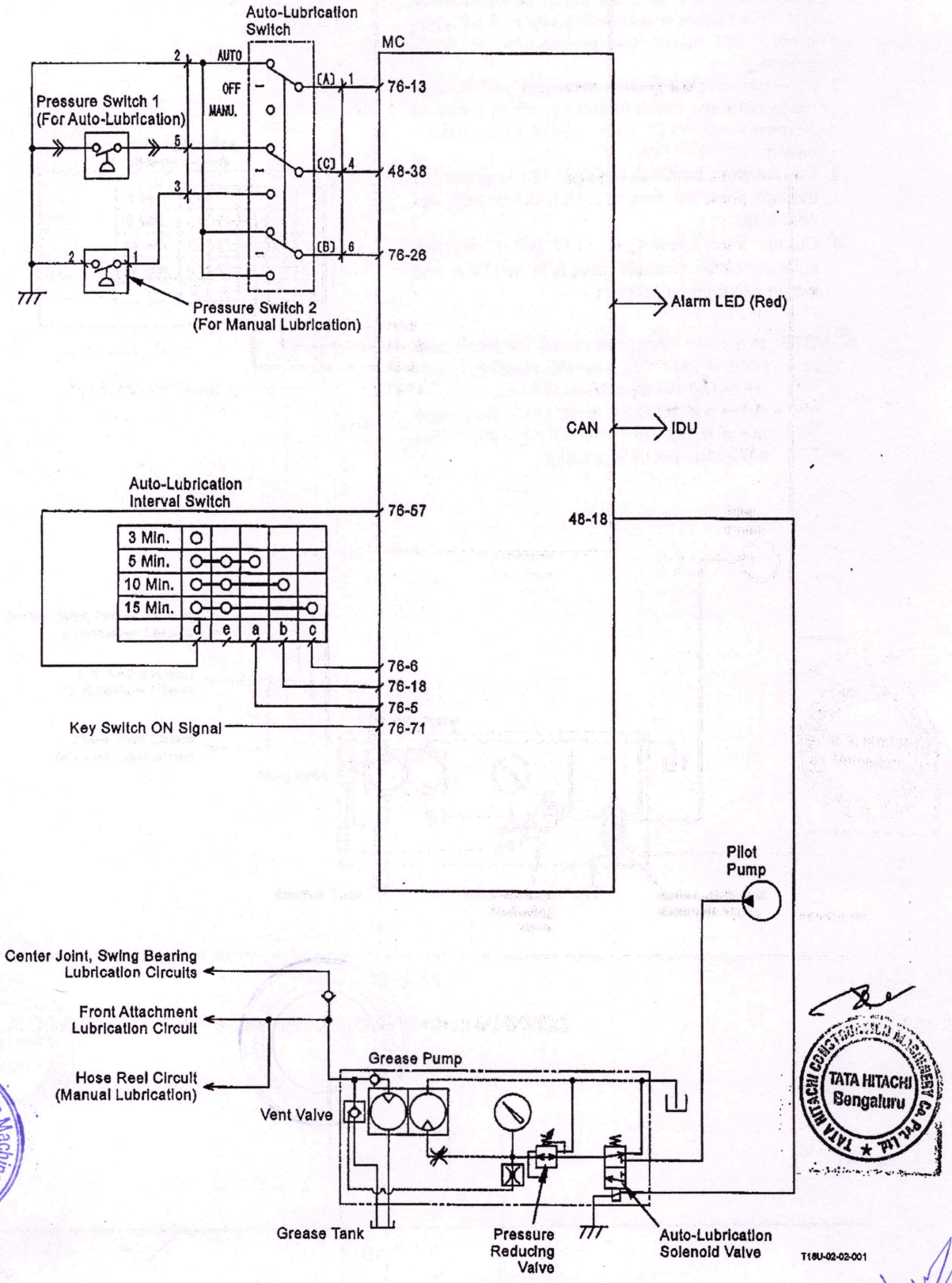

OIL COOLER FAN MOTOR SPEED CONTROL

Purpose: The oil cooler fan motor speed control controls the oil cooler fan motor speed at four stages according to the hydraulic oil temperature and maintains the hydraulic oil temperature in the proper temperature range.

Operation:

1. The hydraulic oil temperature sensor (for oil cooler fan motor speed control) sends signals to MC according to the hydraulic oil temperature.
2. MC controls the oil cooler fan motor speed control solenoid valve according to the hydraulic oil temperature and delivers pilot pressure to the oil cooler fan motor drive pump regulator (Pi). (Refer to COMPONENT OPERATION/Pump Device as for regulator operation.)
3. Therefore, the delivery flow rate of the oil cooler fan motor drive pump is controlled, and the oil cooler fan motor speed is adjusted.
4. The detection data from the hydraulic oil temperature sensor is sent to IDU through the CAN communication.

Oil Cooler Fan Motor Speed at Each Stage of Hydraulic Oil Temperature

Hydraulic Oil Temperature (°C)	Pilot Oil Pressure from Solenoid Valve (Current from MC)	Oil Cooler Fan Motor Speed (min^{-1})
59 °C (120 °F) or Lower	3.54 MPa (36.1 kgf/cm^2, (515 psi)) [400 mA]	290
60 to 69 °C (122 to 156 °F)	1.74 MPa (17.7 kgf/cm^2, (253 psi)) [280 mA]	760
70 to 79 °C (158 to 207 °F)	1.39 MPa (14.2 kgf/cm^2, (202 psi)) [257 mA]	950
80 °C (176 °F) or Higher	0 MPa (0 kgf/cm^2, (0 psi)) [50 mA]	1260±50

NOTE: Oil cooler fan motor speeds described above are those at the rated engine speed (1800 min^{-1}).

SYSTEM / Control System

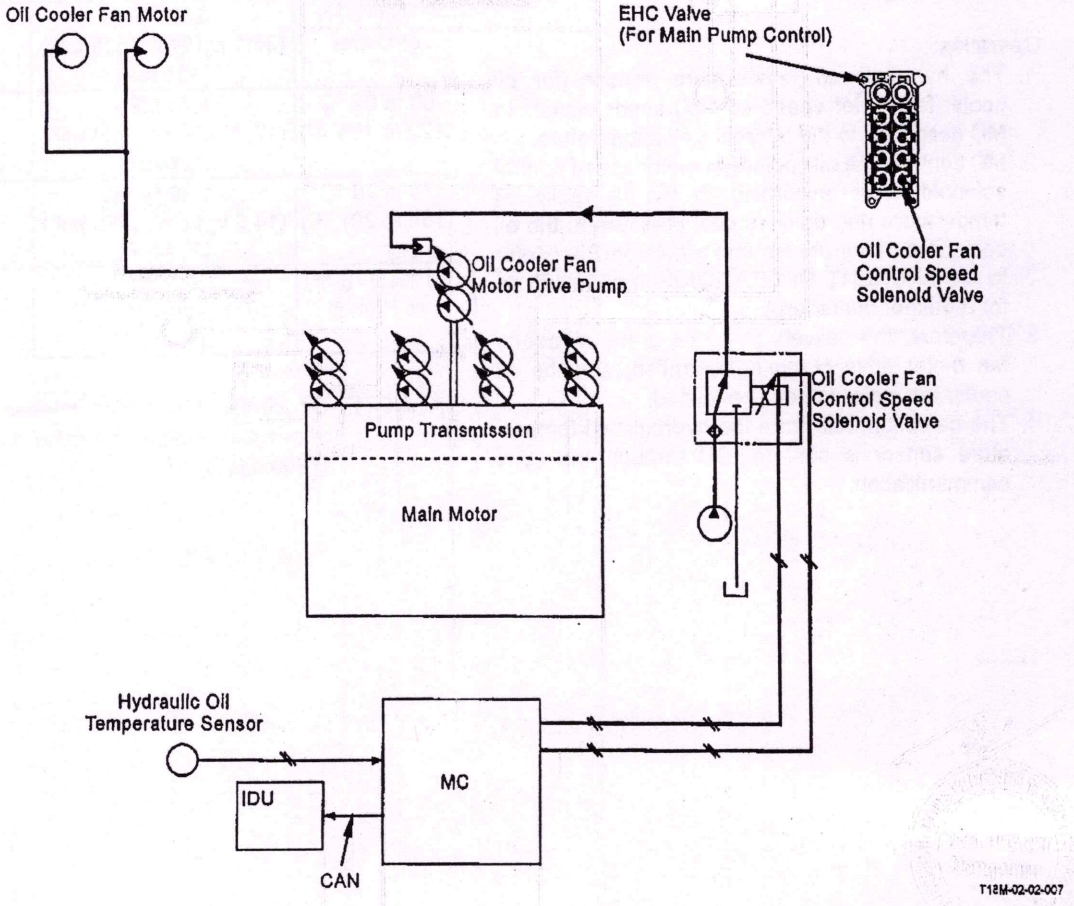

SYSTEM / Control System

WIPER CONTROL

Intermittent Operation

Purpose: The wiper control operates the wiper at intervals set by the interval switch.

Operation:
1. The interval switch sends electric signals to MC at the set intervals.
2. When the wiper switch is set to the INT. position, MC receives electrical signals.
3. MC outputs current from terminal 48-4 of MC at intervals set by the interval switch and turns wiper relay 1 ON for about one second.
4. As wiper relay 1 is ON, current from fuse #75 operates the wiper motor one turn at slow speed.

Slow Speed Operation

Purpose: The wiper control operates the wiper at slow speed.

Operation:
1. When the wiper switch is set to the LOW position, MC receives electrical signals.
2. MC outputs current from terminal 48-4 of MC and turns wiper relay 1 ON.
3. As wiper relay 1 is ON, current from fuse #75 operates the wiper motor at slow speed.

Fast Speed Operation

Purpose: The wiper control operates the wiper at fast speed.

Operation:
1. When the wiper switch is set to the HIGH position, MC receives electrical signals.
2. MC outputs current from terminal 48-16 of MC and turns wiper relay 3 ON.
3. As wiper relay 3 is ON, current from fuse #76 operates the wiper motor at fast speed.

Washer Operation

Purpose: The wiper control operates the washer, and operates the wiper at slow speed.

Operation:
1. When the washer switch is pushed, the washer motor relay is turned ON and electrical signals from terminal 48-40 of MC are grounded.
2. When the washer motor relay is turned ON, current from fuse #77 operates the washer motor and sprays washer fluid.
   At the same time, wiper relay 1 is turned ON and the wiper motor is operated at slow speed.
3. The wiper motor is continuously operated for five seconds at slow speed after releasing the washer switch.

Tata Hitachi Construction Machinery Co. Pvt. Ltd.

TATA HITACHI CONSTRUCTION MACHINERY CO. PVT. LTD. TATA HITACHI Bengaluru

SYSTEM / Control System

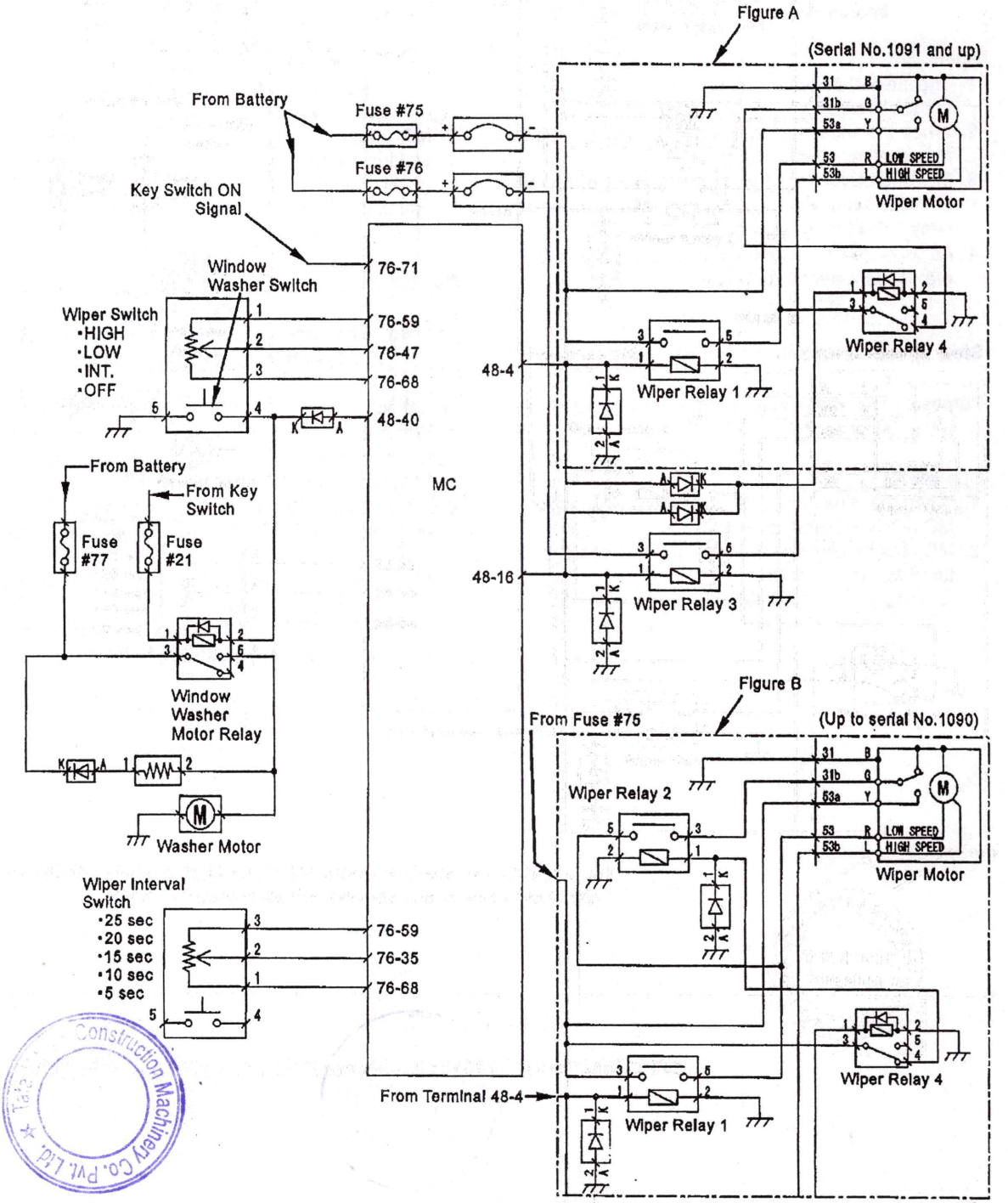

NOTE: *Refer to Figure A for the machine (Serial No.1091 and up).*
Refer to Figure B for the machine (Up to serial No.1090).

T182502-01-026

SYSTEM / Control System

TRAVEL MODE CONTROL

Purpose: The travel mode control shifts fast or slow travel speed by adjusting the travel motor displacement angle with the travel mode switch.

Travel Mode Switch Circuit

When the travel mode switch is OFF (slow), current from fuse #22 does not flow to the travel mode relay. Therefore, the contact of the travel mode solenoid valve is located at #4 side. At this time, IDU displays the slow travel mode mark on the monitor.

When the travel mode switch is ON (fast), current from travel mode relay is grounded.
Therefore, the contact of the travel mode relay is located at the #5 side.
As the travel mode solenoid valve circuit is grounded, the travel mode solenoid valve is activated.
At the same time, IDU displays the fast travel mode mark on the monitor.

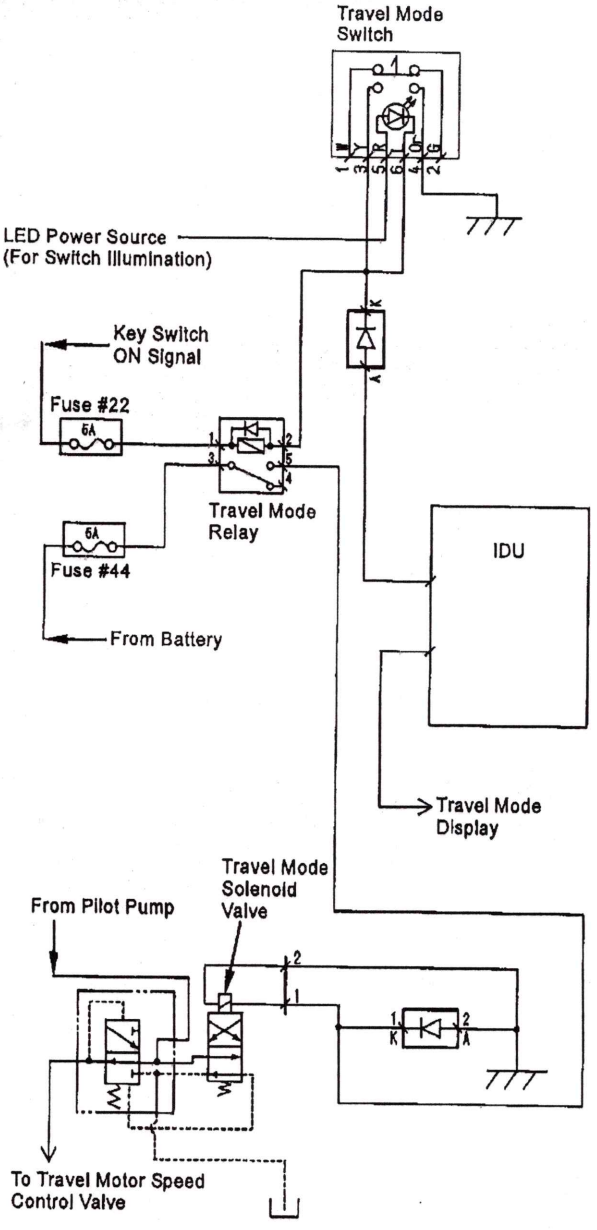

Tata Hitachi Construction Machinery Co. Pvt. Ltd.
TATA HITACHI CONSTRUCTION MACHINERY Co. Pvt. Ltd. TATA HITACHI Bengaluru

SYSTEM / Control System

(Blank)

SYSTEM / Control System

Operation

- Slow Mode Operation

When the travel mode switch is OFF (slow), the travel mode solenoid valve is OFF.
Therefore, pilot pressure is reduced by the pressure reducing valve to the pressure reducing valve set pressure and acts on the spool ends in the travel mode switch valve.
However, the spool in the travel mode switch valve does not move as the travel mode switch valve set pressure is higher than the reduced pilot pressure.

Accordingly, as the main pressure from the control valve acts on the slow side tilt piston and the travel motor displacement angle is increased, travel speed becomes slow.
The pilot pressure also acts on the parking brake and releases the parking brake. (Refer to COMPONENT OPERATION / Travel Device.)

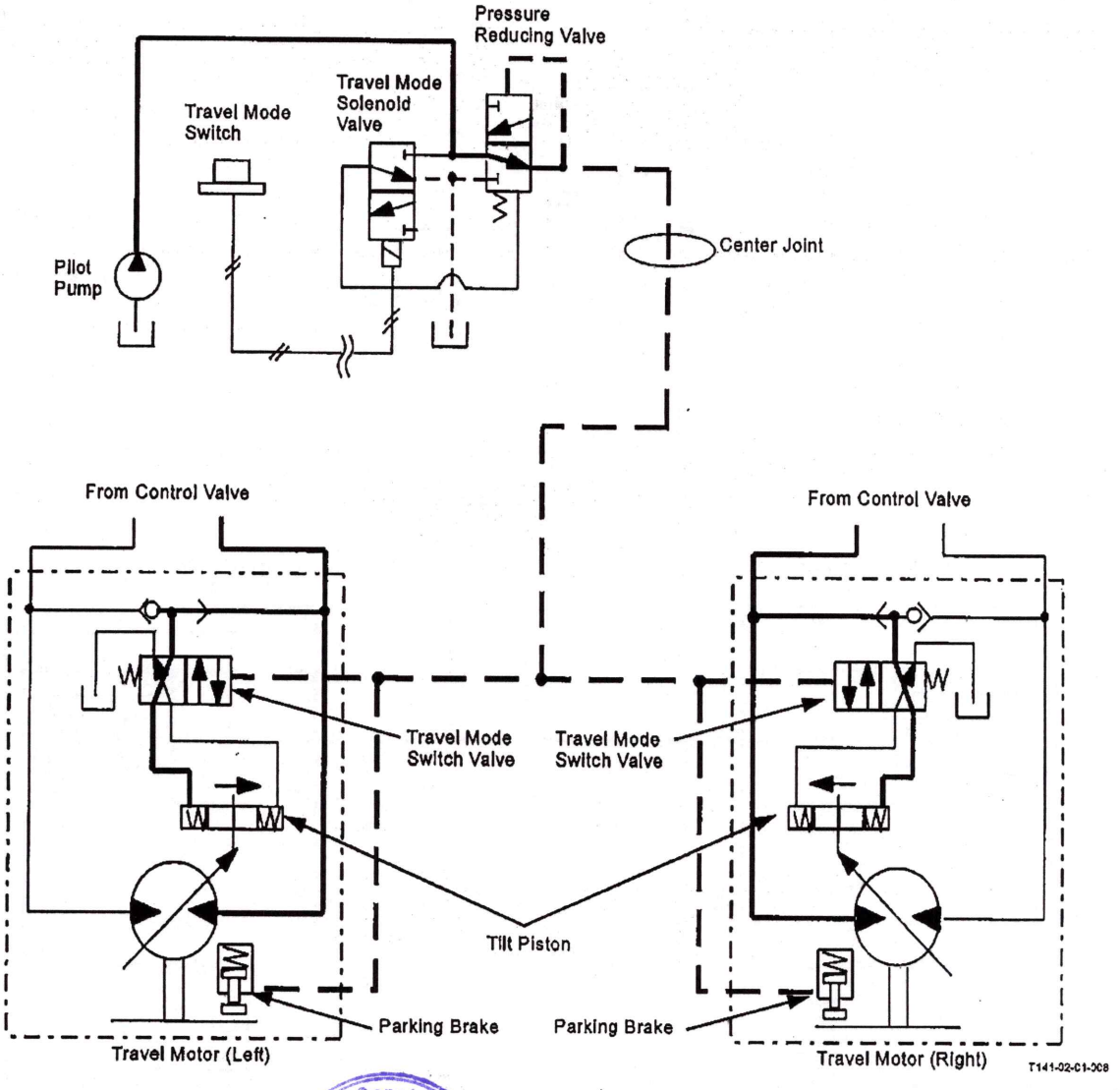

SYSTEM / Control System

- Fast Mode Operation

When the travel mode switch is ON (fast), the travel mode solenoid valve is ON.
Therefore, pilot pressure acts on the spring side in the pressure reducing valve.
Then, the pilot pressure acts on the spool ends in the travel mode switch valve without being reduced by the pressure reducing valve.
As the pilot pressure is not reduced, the spool in the travel mode switch valve is shifted.
Accordingly, as the main pressure from the control valve acts on the fast side tilt piston and the travel motor displacement angle is decreased, travel speed becomes fast.
The pilot pressure also acts on the parking brake and releases the parking brake.

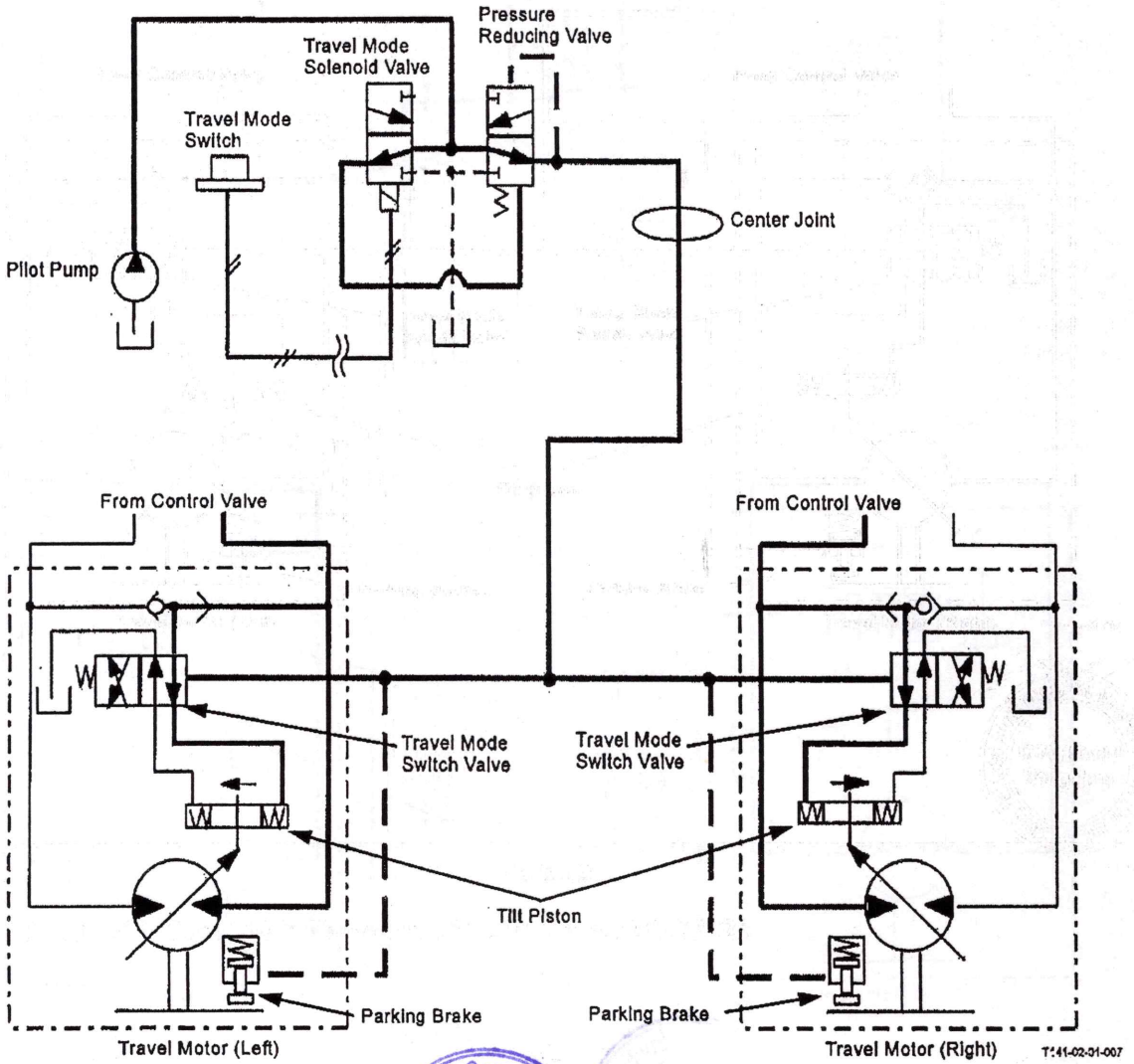

Tata Hitachi Construction Machinery Co. Pvt. Ltd.
TATA HITACHI CONSTRUCTION MACHINERY Co. PVT. LTD. TATA HITACHI Bengaluru

Tender Number: CIL/C2D/20 Cum EHF Shovel/R-151/394 Date: 02.11.2023

Sec-VI, Tech Specs, Part D, Clause - D.9

Details of expected life of major assemblies before first overall

EQUIPMENT	MAJOR ASSEMBLIES	EXPECTED LIFE* (in Hours)
Hitachi EX3600E-6 Hydraulic face Shovel	Prime Mover (Elect.)	Beyond 45,000 Hours
	Under carriage	18,000 Hours to 24,000 Hours
	Hydraulic pump	18,000 Hours to 24,000 Hours
	Hydraulic motor	Travel Motor- 24,000 Hours to 32,000 Hours Swing Motor- 16,000 Hours to 22,000 Hours
	Hydraulic Cylinders *	Dump Cylinder -4,000 Hours to 6,000 Hours Bucket Cylinder -8,000 Hours to 12,000 Hours Arm, Boom and Level Cylinder – 10,000 Hours to 14,000 Hours (Life indicated above for Cylinders refers to Seal Kit Replacement only).
	Hydraulic control valve	Beyond 45,000 Hours
	Boom & Sticks	Beyond 45,000 Hours
	Bucket (Dipper)	Major Repair after 5,000 to 6,000 Hours
	Other Electrical items	Varies from item to item

Note - * Expected life means life before first overhaul

Tata Hitachi Construction Machinery Co. Pvt. Ltd.

DETAILS ERRECTION AND COMISSIONING PLAN - Hitachi EX3600E-6 | Sec-VI, Tech Specs, Part D, Clause- D.10.1, General (c)		
Tender Number: CIL/C2D/20 Cum EHF Shovel/R-151/394 Date: 02.11.2023		
DATE(total 30 days)	SUPPORT RQD	EX3600E-6
ACTIVITY		
UN-PACKING MAJOR COMPONENT/CHECKING PARTS/CHECKING OF TOOLS /CLEANING PARTS	CRANE -80T - 2 Nos CRANE -20T -1 No	
ASSEMBELY OF UNDER-CARRIAGE	CRANE -80T - 2 Nos CRANE -20T -1 No	
MOUNTING BASIC MACHINE ON UNDER-CARRIAGE/MOUNTING OF OIL TANK ON BASIC M/C/ASSEMBLY OF CATWALKS/HANDRAILS / LADDER.	CRANE -80T - 2 Nos CRANE -20T -1 No	
MOUNTING OF HT PANEL ON BASIC MACHINE / MOUNTING COUNTERWEIGHT /MOUNTING OF ELECTRIC MOTOR & CONNECTION TO POWER SUPPLY	CRANE -80T - 2 Nos CRANE -20T -1 No	
HOSE CONNECTION		
HARNESS CONNECTION		
AIR CONDITIONER FITMENT AND GAS CHARGING	CRANE -20T -1 No	
MACHINE START		
MOUNTING FRONT -END ATTACHMENT	CRANE -80T - 2 Nos CRANE -20T -1 No	
INSTALLATION OF BUCKET & CLEANING+ WASHING	CRANE -80T - 2 Nos CRANE -20T -1 No	
COMMISSIONING, TESTING & PERFORMANCE TEST		
HAND OVER		

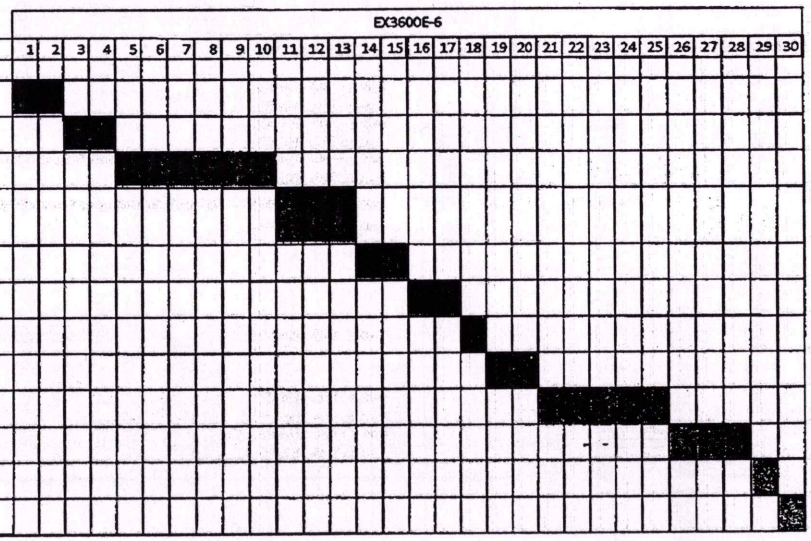

Requirement from CIL

MINIMUM AREA REQUIRED=	30M X40 M
2 NUMBER 80 TON CRANE & 1 NUMBER 20 TON CRANE (ALONG WITH OPERATOR & FUEL)	As & when required
CLEAN WATER, HV POWER SUPPLY , ELECTRICITY, WELDING CONNECTION, WASHING FACILITY etc.	As & when required

Tata Hitachi Construction Machinery Co. Pvt. Ltd.

12/08/25

Annexure - k

HITACHI

Reliable solutions

D.10.2 Technical Details (a)

Volumetric rating of the bucket according to IS 12206/ISO 7546 together with verification calculations and drawings: Hitachi EX3600E-6

Tender Number: CIL/C2D/20 Cum EHF Shovel/R-151/394 Date: 02/11/2023

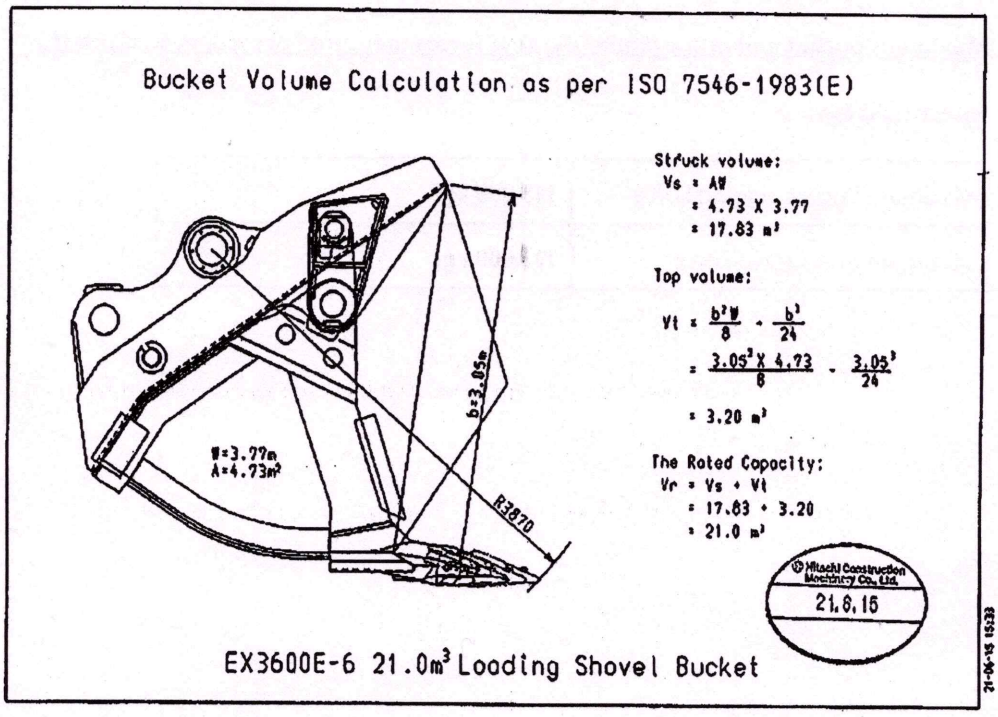

HITACHI CONSTRUCTION MACHINERY CO., LTD.

J.Hatori
Manager
Business Development Dept.
Mining Sales and Service Div.

Tata Hitachi Construction Machinery Co. Pvt. Ltd.

HITACHI

Reliable solutions

Tender Number: CIL/C2D/20 Cum EHF Shovel/R-151/394 Date: 02/11/2023

As per Part D Equipment Specification Clause No D.10.2 Technical Details (b)

Maximum bucket and arm cylinder digging forces measured according to ISO 6015

Hitachi EX3600E-6

Maximum Bucket digging Force	119,000 kgf
Maximum Arm Crowd Force	113,000 kgf

HITACHI CONSTRUCTION MACHINERY CO., LTD.

J.Hatori
Manager
Business Development Dept.
Mining Sales and Service Div.

Tata Hitachi Construction Machinery Co. Pvt. Ltd.

HITACHI

Reliable solutions

Tender Number: CIL/C2D/20 Cum EHF Shovel/R-151/394 Date: 02.11.2023

As per Part D Equipment Specification Clause No D.10.2 Technical Details (c)

Schematic drawing of the machine showing the position of the Center of Gravity and it's distance from the Central Axis of Rotation under the following operating conditions:

i. Bucket at maximum digging force position with crawler tracks perpendicular to the face of the cut.

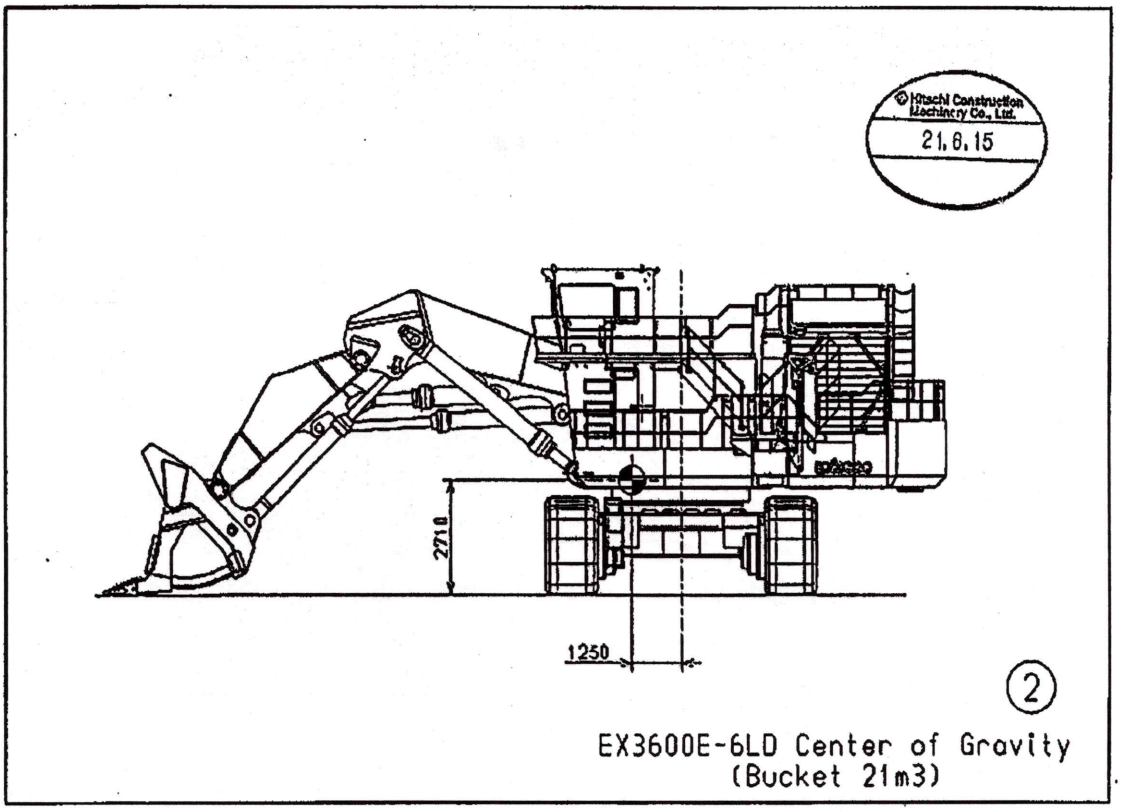

HITACHI CONSTRUCTION MACHINERY CO., LTD.

J.Hatori
Manager
Business Development Dept.
Mining Sales and Service Div.

Tata Hitachi Construction Machinery Co. Pvt. Ltd.

HITACHI

Reliable solutions

Tender Number: CIL/C2D/20 Cum EHF Shovel/R-151/394 Date: 02.11.2023

As per Part D Equipment Specification Clause No D.10.2 Technical Details (c)

Schematic drawing of the machine showing the position of the Center of Gravity and it's distance from the Central Axis of Rotation under the following operating conditions:

ii. Bucket at maximum digging force position with crawler tracks parallel to the face of the cut.

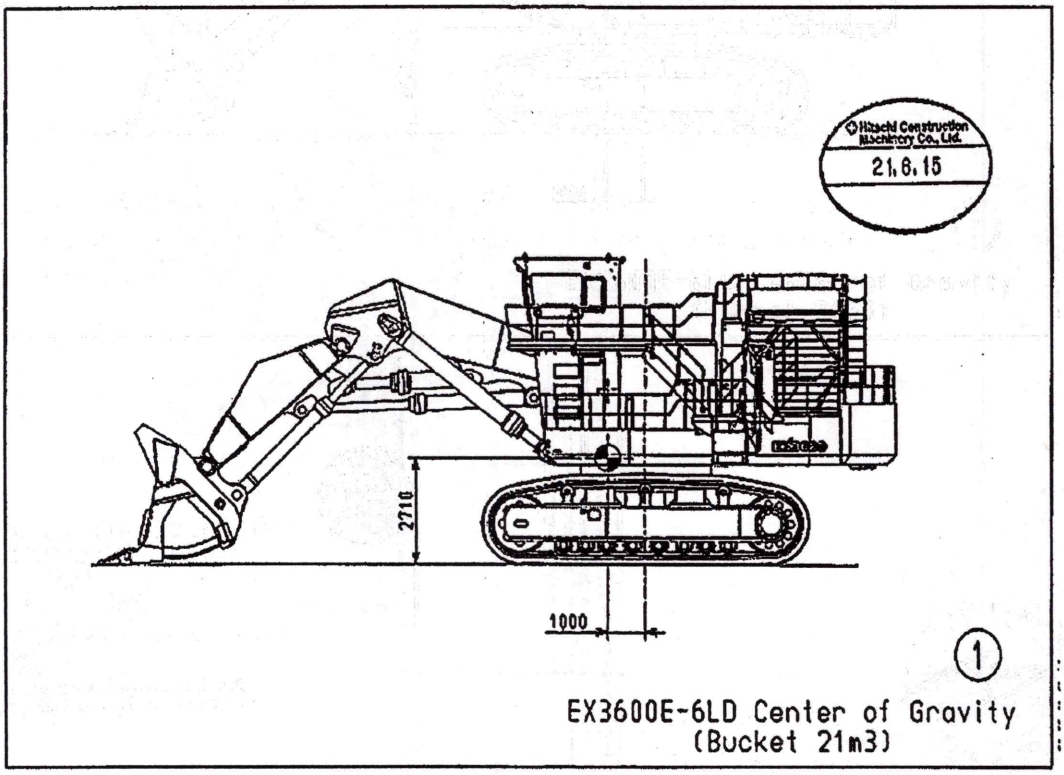

HITACHI CONSTRUCTION MACHINERY CO., LTD.

J.Hatori
Manager
Business Development Dept.
Mining Sales and Service Div.

Tata Hitachi Construction Machinery Co. Pvt. Ltd.

Tender Number: CIL/C2D/20 Cum EHF Shovel/R-151/394 Date: 02.11.2023

As per Part D Equipment Specification Clause No D.10.2 Technical Details (d)

Details of electric drive control systems, including circuit diagrams, motor details and transformer specifications.

1. **Hitachi EX3600E-6 Electrical System Enclosed.**

2. **Transformer Specification**

Model	FM-KF/HKVP(TC)3.0
Type	Indoor Dry-type Self-cooled Molded Transformers
Usage	For mounting on hydraulic excavators
Heat-resistant class	F
Phase	Three phase

Tata Hitachi Construction Machinery Co. Pvt. Ltd.

SYSTEM / Electrical System

OUTLINE

The electrical circuit is broadly divided into the main circuit, the monitor circuit, and the control circuit.

- Main Circuit
  Operates the main motor and the accessory related circuits.
- Control Circuit
  Functions to control the machine.
- Monitor Circuit
  Displays the machine operating conditions.
  (Refer to SYSTEM/Control System.)

The functions and construction of the main circuits are explained here.

- Main Circuit
  - Electric Power Circuit: Supplies electric power to all electrical systems on the machine.
  - Accessory Circuit: Is operated when the key switch is in the ACC position.
  - Main Motor Starting Circuit: Starts the main motor.
  - Cab Heater Power Circuit: Supplies power to the cab heater.
    (Refer to SYSTEM / Electrical System (6600 V).)
  - Charging Circuit: Charges the batteries and supplies current generated by the cubicle in order to operate all the electrical components.
  - Main Motor Stop Circuit: Stops the main motor by using the emergency switch, the limit switch, and the main motor stop switch. Does not restart the main motor.
  - Delay Circuit for Power OFF: Prevents the path light from going off for a time set by the monitor when the power is turned off.

Tata Hitachi Construction Machinery Co. Pvt. Ltd.

SYSTEM / Electrical System

ELECTRIC POWER CIRCUIT (KEY SWITCH: OFF)

The battery minus terminal is grounded to the body. Current flows as shown below when the key switch is in the OFF position.

- Battery →
  - Battery relay (1) terminal A, Battery relay (2) terminal A → Fusible link (250 A) → Cubicle Power Source
  - Fusible link 1 (75 A) → Fuse box 1
  - Fusible link 2 (75 A) →
    - Folding stairway relay (2) terminal #3
    - Folding stairway relay (3) terminal #3
  - Fusible link (250 A) → Folding stairway motor (2)
  - Fusible link (250 A) → Folding stairway motor (1)

- Fuse box 1 →
  - Fuse #1 → MC (Main power)
  - Fuse #2 → Delayed power OFF relay terminals #1, #3
  - Fuse #4 → MMS communication unit (Main power) (Optional)
  - Fuse #5 → HMU (Main power)
  - Fuse #6 → Horn air compressor relay (L1) terminal #3
  - Fuse #7 → Horn air compressor relay (R1) terminal #3
  - Fuse #8 →
    - Folding stairway relay (1) terminal #3
    - Folding stairway alarm/Flash light (1) terminal #12
  - Fuse #9 → Limit switch (Fluorescent light switch) (Electrical equipment component box)
  - Fuse #10 → Fuse box (Cab)
  - Fuse #11 → C/U (J1939-CAN) terminal A (Optional)
  - Fuse #12 → C/U (Ke-CAN) terminal A (Optional)

- Fuse box → (Cab)
  - Fuse #1 → Key switch terminal B
  - Fuse #2 → ELU (Main power)
  - Fuse #3 → IDU (Main power)
  - Fuse #4 → DLU (Main power)
  - Fuse #5 → ORBCOMM terminal #2 (Main power) (Optional)
  - Fuse #6 → Radio (Backup power)

NOTE: The LED light in the electrical equipment component box is able to light even when the main motor stops.

SYSTEM / Electric System

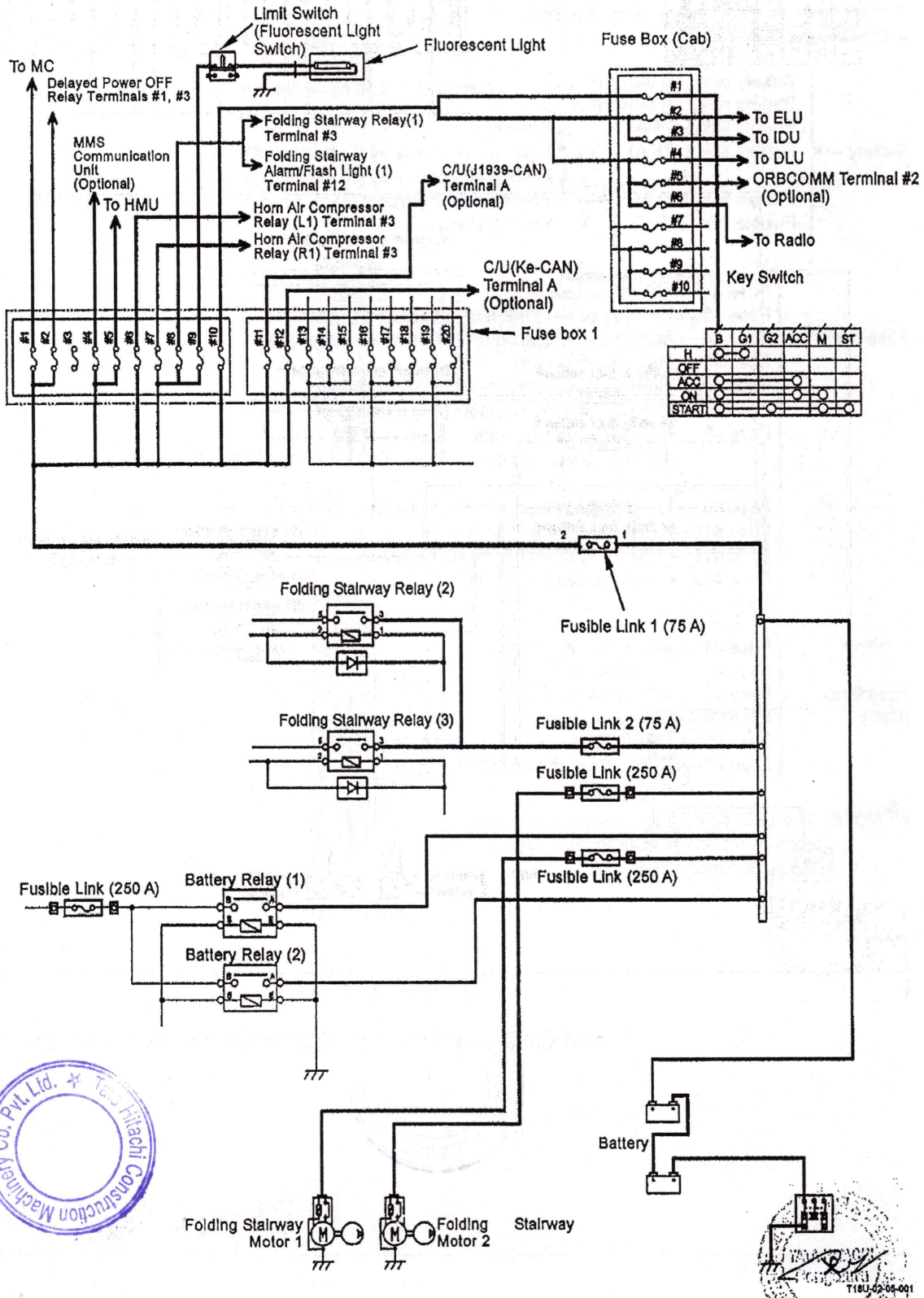

ACCESSORY CIRCUIT (KEY SWITCH: ACC)

The accessory circuit supplies power to the radio, the horn air compressor, the cigarette lighter, and the power source terminal.

1. When the key switch is turned to the ACC position, terminal B in the key switch is connected to terminal ACC.
2. Current from terminal ACC flows to fuses #13, #14, #15, and #16 in the fuse box (Cab).
3. Current through fuse #13 powers the radio.
4. Current through fuse #14 flows to horn compressor relay (L2) and the horn relay.
   As horn pressure switches (L1, L2) are OFF when air pressure is low, horn air compressor (L2) is not excited. Therefore, horn air compressor (L1) is excited, and current flows to horn air compressor (L). Consequently, horn air compressor (L) is operated.
   When air pressure increases, horn pressure switches (L1, L2) are turned ON. Horn air compressor (L2) is excited, and the horn air compressor (L2) contact is turned OFF. Consequently, horn air compressor (L1) is unexcited, and horn air compressor (L) stops.
   When the horn switch is turned ON, the horn relay is operated so that current flows to horn (L) and sounds the horn.

NOTE: Horn air compressor (R) is optional.

5. Current through fuse #15 powers the cigarette lighter.
6. Current through fuse #16 powers power source terminal (1).

Tata Hitachi Construction Machinery Co. Pvt. Ltd.

SYSTEM / Electric System

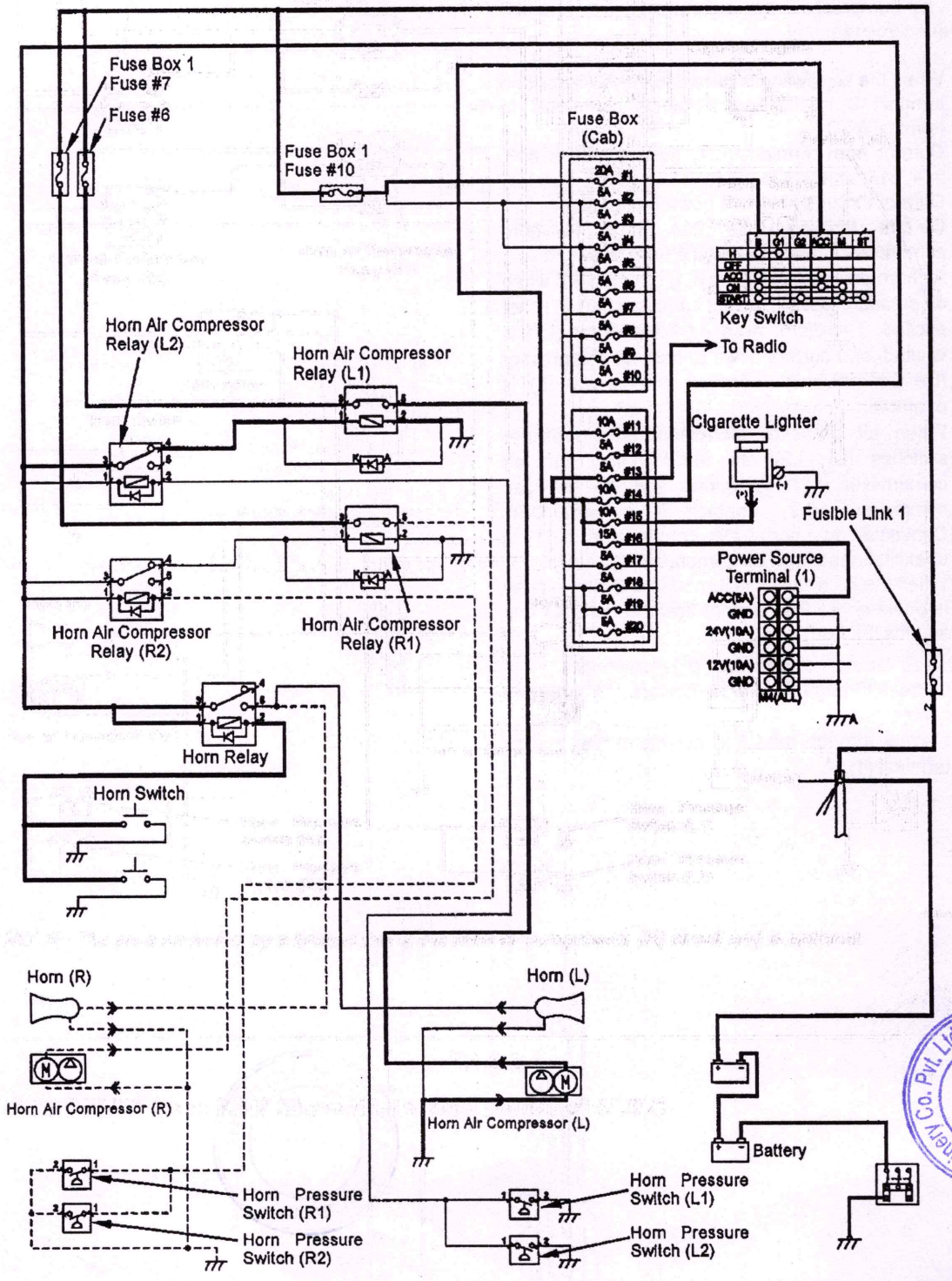

NOTE: The area encircled by a broken line is the horn air compressor (R) circuit and is optional.

T18U-02-05-002

SYSTEM / Electric System

MAIN MOTOR STARTING CIRCUIT:

Key Switch: ON

1. When the key switch is turned to the ON position, current from terminal M in the key switch excites battery relays (1) and (2) through fuse #11 in the fuse box (cab) and fuse #26 in fuse box 2.
2. As battery relays (1) and (2) are excited, current from the battery flows to the cubicle through battery relays (1) and (2).
3. Current from terminal M in the key switch flows to the main motor start switch through fuse #12 in the fuse box (Cab), emergency switches 1 to 6, and valve limit switches (return-U), (return-L), (L-suction), and (R-suction).
4. Current from valve limit switches (return-U), (return-L), (L-suction), and (R-suction) flows to the main motor stop switch.

SYSTEM / Electric System

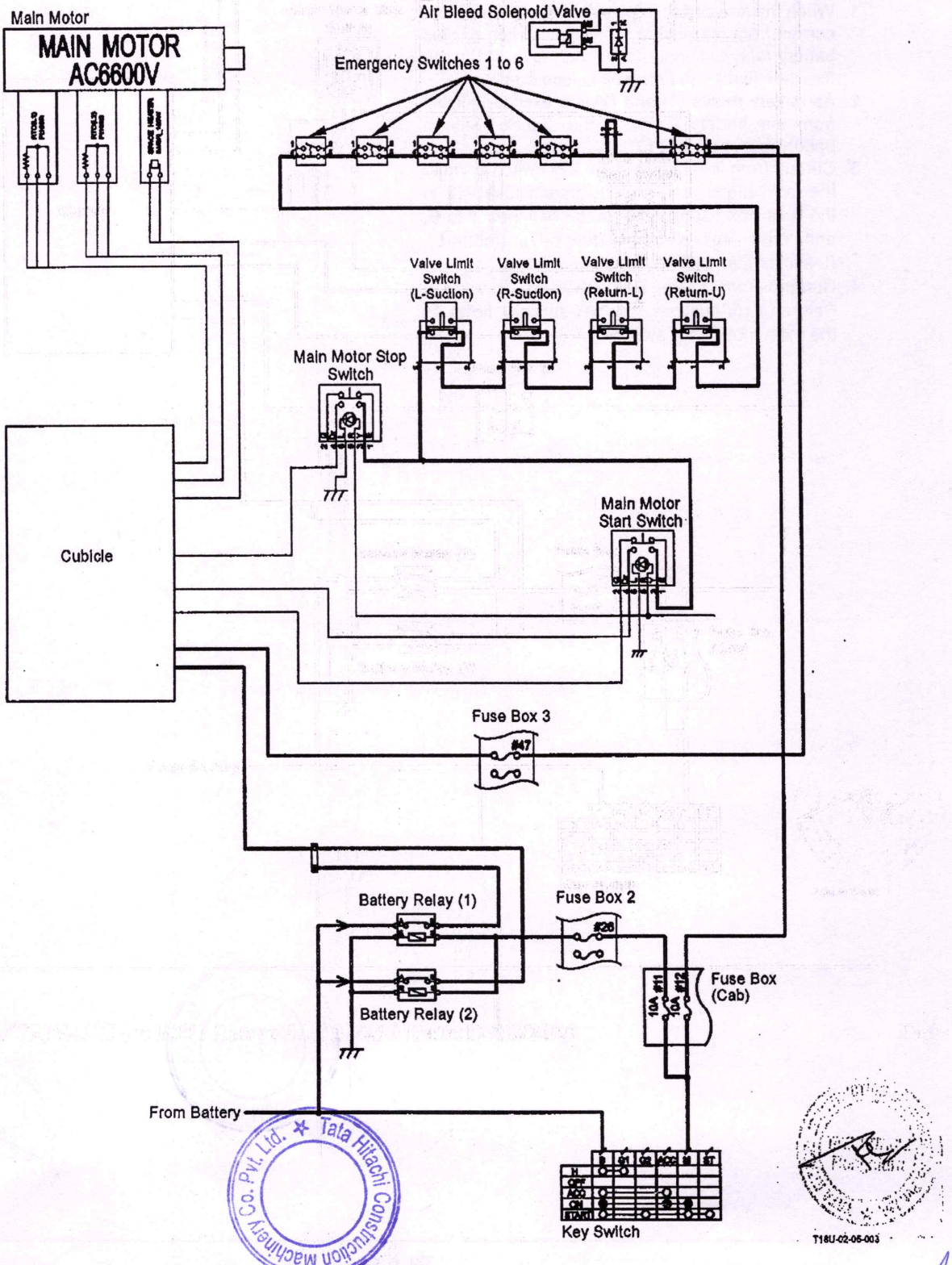

Tata Hitachi Construction Machinery Co. Pvt. Ltd.

SYSTEM / Electric System

Key Switch: START

1. When the main motor start switch is pushed, current from terminal M in the key switch flows to the cubicle through the main motor start switch.
2. Therefore, the cubicle starts the main motor. (For details of the cubicle operation, refer to SYSTEM / Electrical System (6600V).)

Tata Hitachi Construction Machinery Co. Pvt. Ltd.

SYSTEM / Electric System

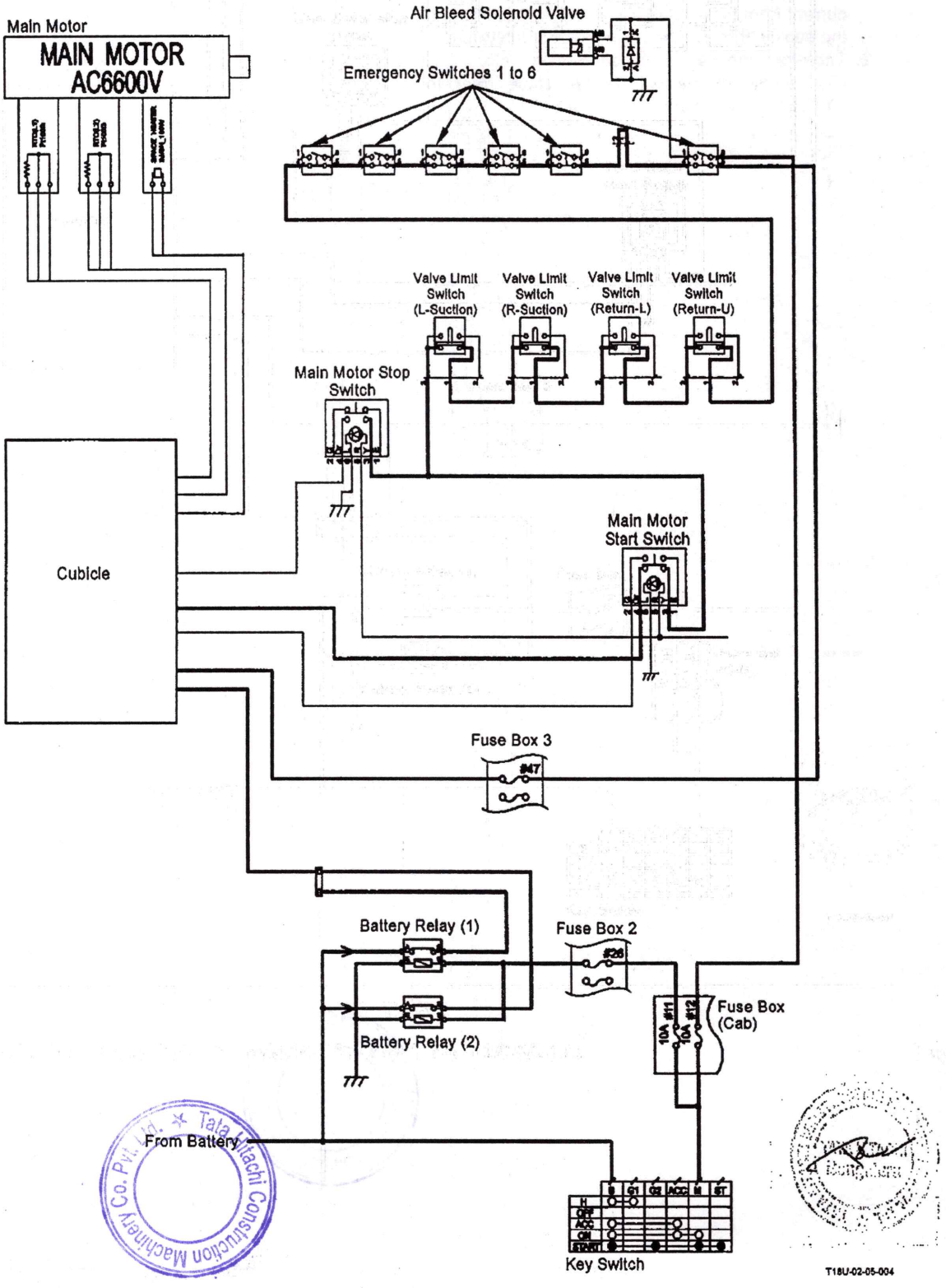

SYSTEM / Electric System

CHARGING CIRCUIT (KEY SWITCH: ON)

1. When the key switch is in the ON position, terminal B is connected to terminals ACC and M in the key switch.
2. Current from terminal M in the key switch flows to battery relays (1) and (2) through fuse #11 in the fuse box (cab) and fuse #26 In fuse box 2, so that the battery relay is kept ON.
3. Current from the cubicle flows to the batteries through terminal 2, battery relays (1), (2), and terminal 1, so that the batteries are charged.
4. At the same time, current from the cubicle flows to fusible link 1 through terminals 2 and 1. Current flows to each circuit through fuse box 1 and the fuse box (cab).
5. Current from the cubicle flows to fuse boxes 2 to 4 through the 24V POWER line in order to supply power to the 24 circuits.
   (For details of the cubicle operation, refer to SYSTEM / Electrical System (6600 V).)

Terminal	Connected to	Remark
Terminal 1	Fusible link 1 (75 A)	-
	Battery (1)	-
	Battery (2)	-
	Folding stairway relays (2), (3)	Folding stairway circuit ground signal
	Folding stairway motor 1	Power source
	Folding stairway motor 2	Power source

SYSTEM / Electric System

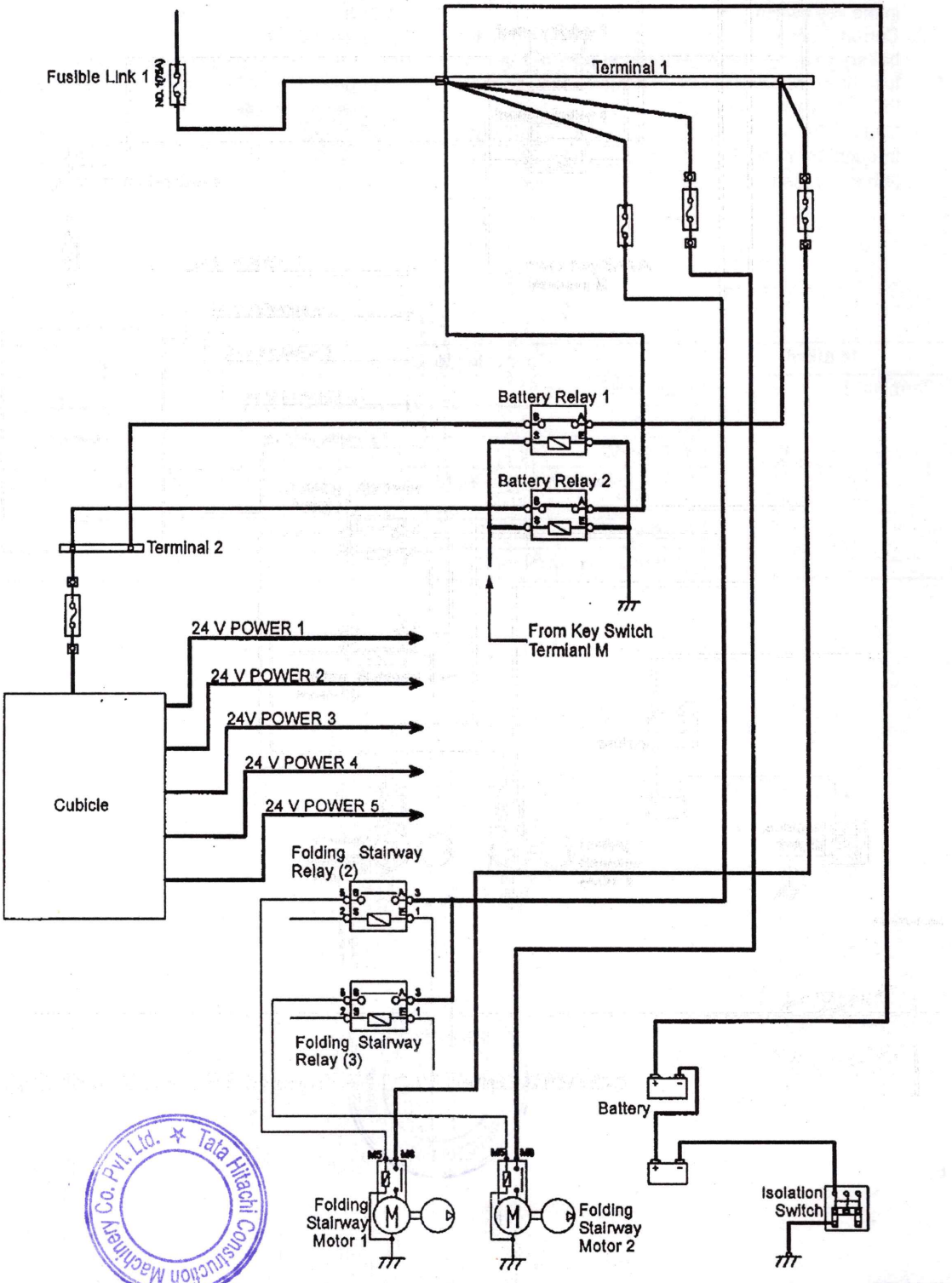

Tata Hitachi Construction Machinery Co. Pvt. Ltd.

SYSTEM / Electric System

Fusible link	Through Fuse Box		Connected to	Remark
#1	Fuse box 1	#1	MC terminal #76-55	Main power source
		#2	Delayed power OFF terminal #1	Ground circuit
		#3	-	
		#4	MMS communication unit (optional) terminal B	Main power source
		#5	HMU terminal #76-55	Main power source
		#6	Horn air compressor relay (L1) terminal #3	Power source
		#7	Horn air compressor relay (R1) terminal #3	Power source
		#8	Folding stairway relay (1) terminal #3 Folding stairway alarm terminal #12	Power source Power source
		#9	Limit switch (fluorescent light switch) terminal #2	Power source
		#10	Fuse box (cab)	-
		#11	C/U (J1939-CAN) terminal A	Main power source
		#12	C/U. Ke-CAN (optional) terminal A	Main power source

Through Fuse Box			Connected to	Remark
Fuse box 1 Fuse #10	Fuse box (cab)	#1	Key switch terminal B	Main power source
		#2	ELU terminals #76-55, #76-56, and #76-57	Main power source
		#3	IDU terminal CN1–55	Main power source
		#4	Terminals DLU#76–13, #76–26	Main power source
		#5	ORBCOMM (optional) terminal #2	Main power source
		#6	Radio terminal #1	Backup

Key Switch	Through Fuse Box		Connected to
Terminal ACC	Fuse box (cab)	#13	Radio
		#14	Horn air compressor ACC signal
		#15	Cigarette lighter
		#16	Power source terminal
Terminal M	Fuse box (cab)	#7	ELU key switch ON signal
		#8	IDU key switch ON signal
		#9	DLU key switch ON signal
		#10	Buzzer
		#11	Control box key switch ON signal
		#12	Emergency switch 5
		#20	Pilot shut-off switch

SYSTEM / Electric System

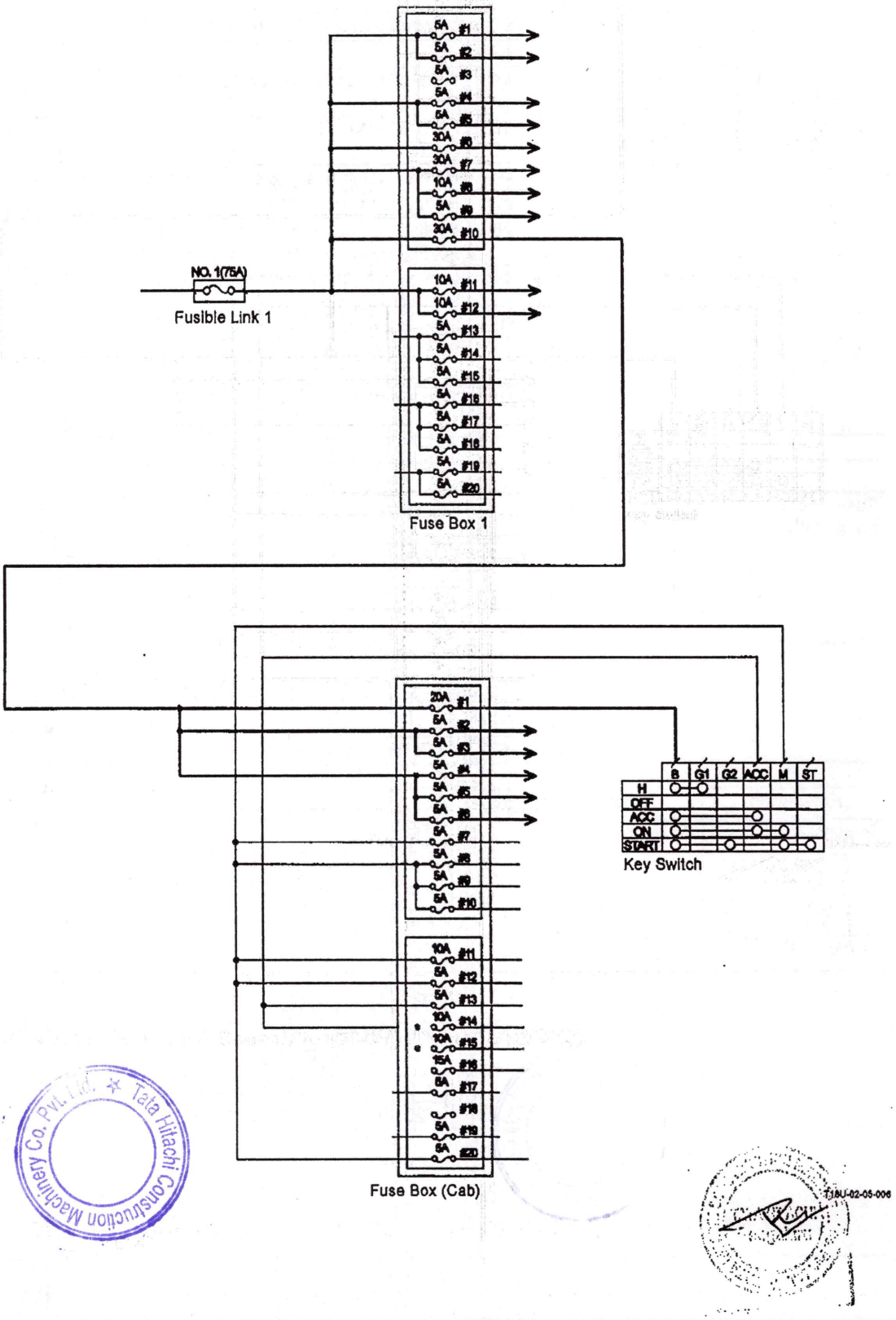

SYSTEM / Electric System

Cubicle	Through Fuse Box		Connected to	Remark
24V POWER 1	Fuse box 2	#31	A/C main relay (front) terminal #3	Power source
		#32	A/C main relay (side) terminal #3	Power source
		#33	A/C main relay (rear) terminal #3	Power source
	Fuse box 4	#69	Maintenance light relay 3 terminal #3	Power source
		#70	Maintenance light relay 4 terminal #3	Power source
24V POWER 2	Fuse box 2	#30	Travel alarm terminal A	Power source
		#34	A/C fan relay (front) terminal #3	Power source
		#35	A/C fan relay (side) terminal #3	Power source
		#36	A/C fan relay (rear) terminal #3	Power source
	Fuse box 3	#48	Power source terminal 1	Power source
		#49	DC/DC converter terminal 1+IN	Power source
		#50	DC/DC converter terminal 2+IN	Power source
	Fuse box 4	#73	Entrance light relay 1 terminals #1, #3	Power source

Tata Hitachi Construction Machinery Co. Pvt. Ltd.

SYSTEM / Electric System

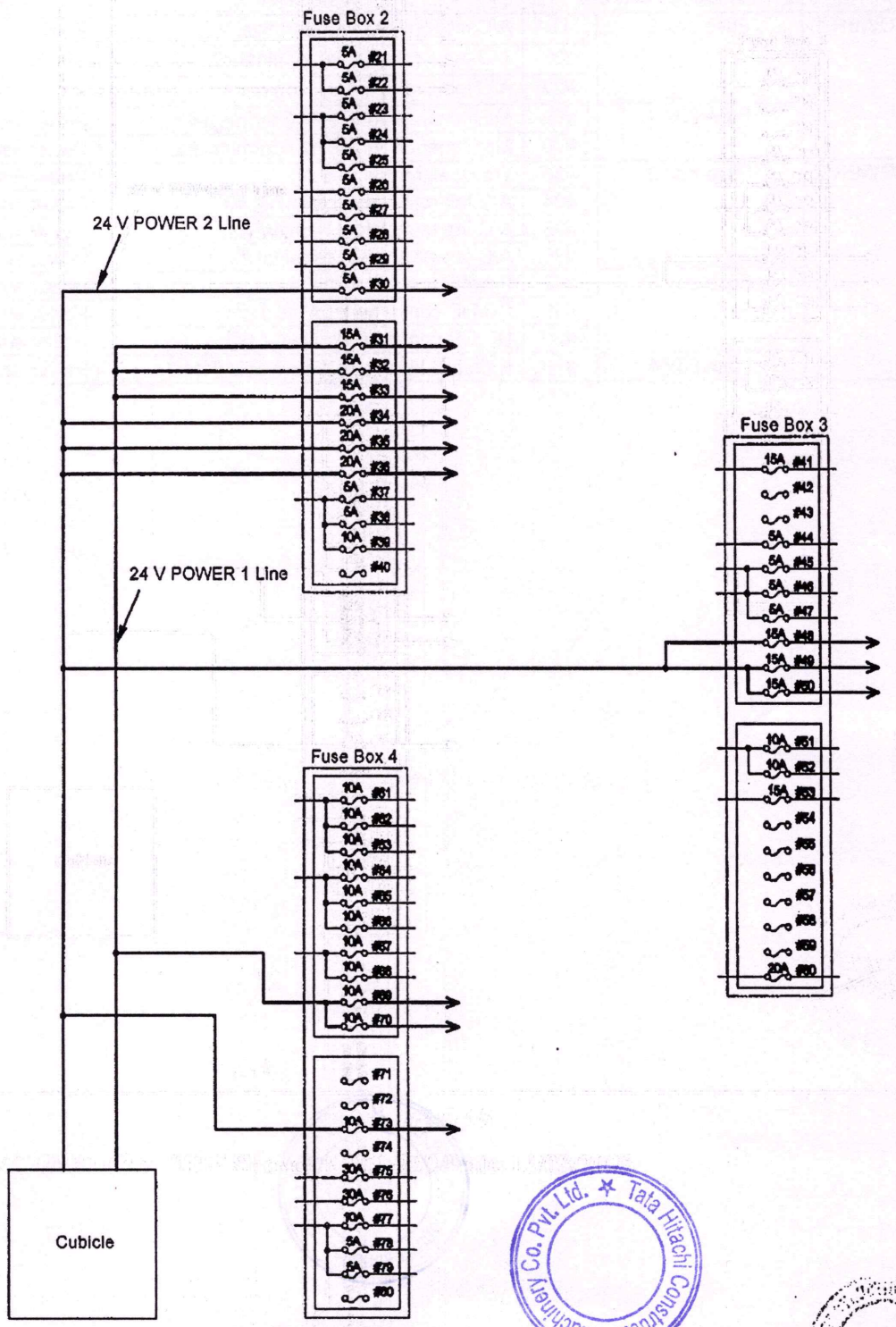

SYSTEM / Electric System

Cubicle	Through Fuse Box		Connected to	Remark
24V POWER 3	Fuse box 2	#37	DLU service tool terminal J	Power source
		#38	ORBCOMM (Optional) terminal #1	Power source
		#39	MMS communication unit (Optional) terminal A	Power source
	Fuse box 3	#44	Travel mode selector relay terminal #3	Power source
		#45	Folding stairway relay 4 terminals #1, #3	Power source
		#46	Dome LED (cab/F, R) terminal #2	Power source
		#47	Emergency switch 1 terminal #8	Power source
		#53	ELU PWM power relay (1) terminal #3	Power source
			ELU terminal #48-1	Solenoid power source
		#60	Oil pump	Power source
	Fuse box 4	#67	Maintenance light relay 1 terminals #1, #3	Power source
		#68	Maintenance light relay 2 terminal #3	Power source
		#77	Washer motor relay terminal #3	Power source
		#78	Fast-filling system relay terminal #3	Power source
		#79	CSU terminal #9	Main power source

Tata Hitachi Construction Machinery Co. Pvt. Ltd.

SYSTEM / Electric System

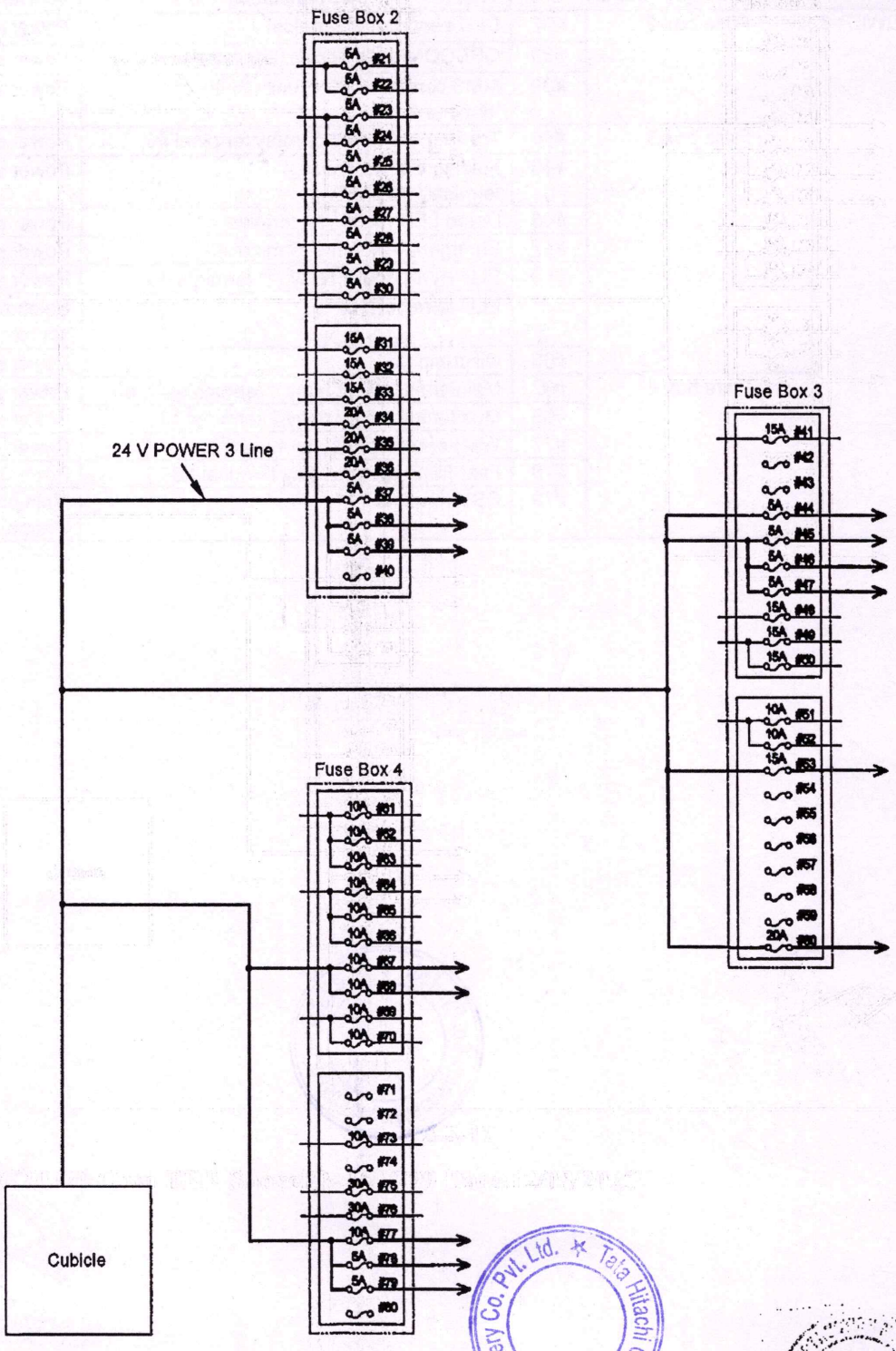

Tata Hitachi Construction Machinery Co. Pvt. Ltd.

SYSTEM / Electric System

Cubicle	Through Fuse Box		Connected to	Remark
24V POWER 4	Fuse box 4	#61	Work light relay 1 terminals #1, #3	Power source
		#62	Work light relay 2 terminal #3	Power source
		#63	Work light relay 3 terminal #3	Power source
		#64	Work light relay 4 terminal #3	Power source
		#65	Work light relay 5 terminal #3	Power source
		#66	Work light relay 6 terminal #3	Power source
24V POWER 5	Fuse box 3	#41	Seat suspension air compressor terminal #2	Power source
		#51	MC terminal #48-12	Solenoid power source
		#52	MC terminal #48-13	PWM power source
	Fuse box 4	#75	Wiper motor circuit breaker 1 (10 A)/motor (L)	Power source
		#76	Wiper motor circuit breaker 2 (20 A)/motor (H)	Power source

Tata Hitachi Construction Machinery Co. Pvt. Ltd.

SYSTEM / Electric System

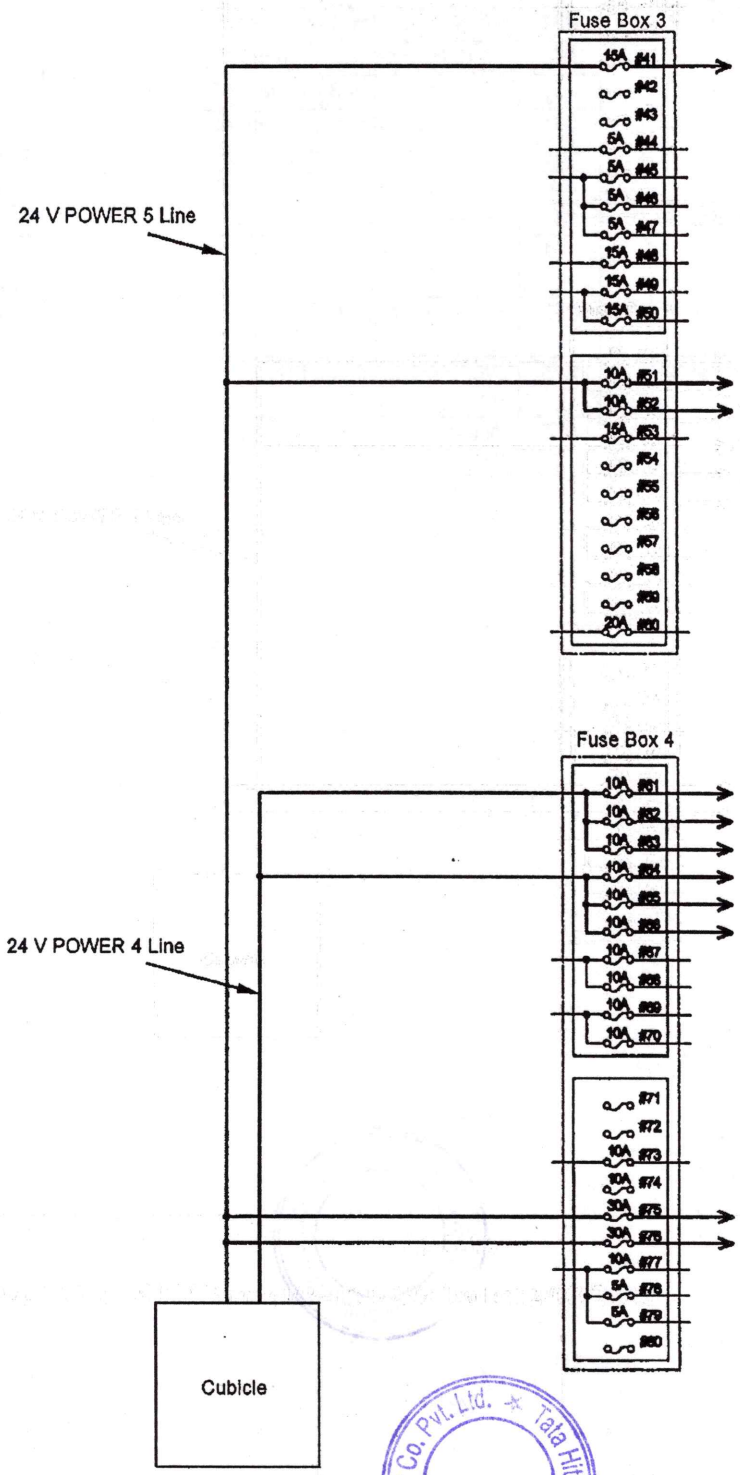

SYSTEM / Electric System

MAIN MOTOR STOP CIRCUIT

Main Motor Stopping by Emergency Switch

1. When emergency switches 1 to 6 which are provided at several locations on the machine are turned to the emergency stop position, current from terminal M in the key switch to the cubicle is blocked.
2. The cubicle stops the main motor. (Refer to SYSTEM / Electrical System (6600 V).)
3. At the same time, as current to the main motor start switch is blocked, the main motor cannot start.
4. Only when emergency switch 1 in the cab is turned to the emergency stop position, the air bleed solenoid valve of the hydraulic oil tank is operated and releases the pressure inside the hydraulic oil tank.

NOTE: The figure on the next page shows the status when emergency switch 1 is turned to the emergency stop position.

Tata Hitachi Construction Machinery Co. Pvt. Ltd.

SYSTEM / Electric System

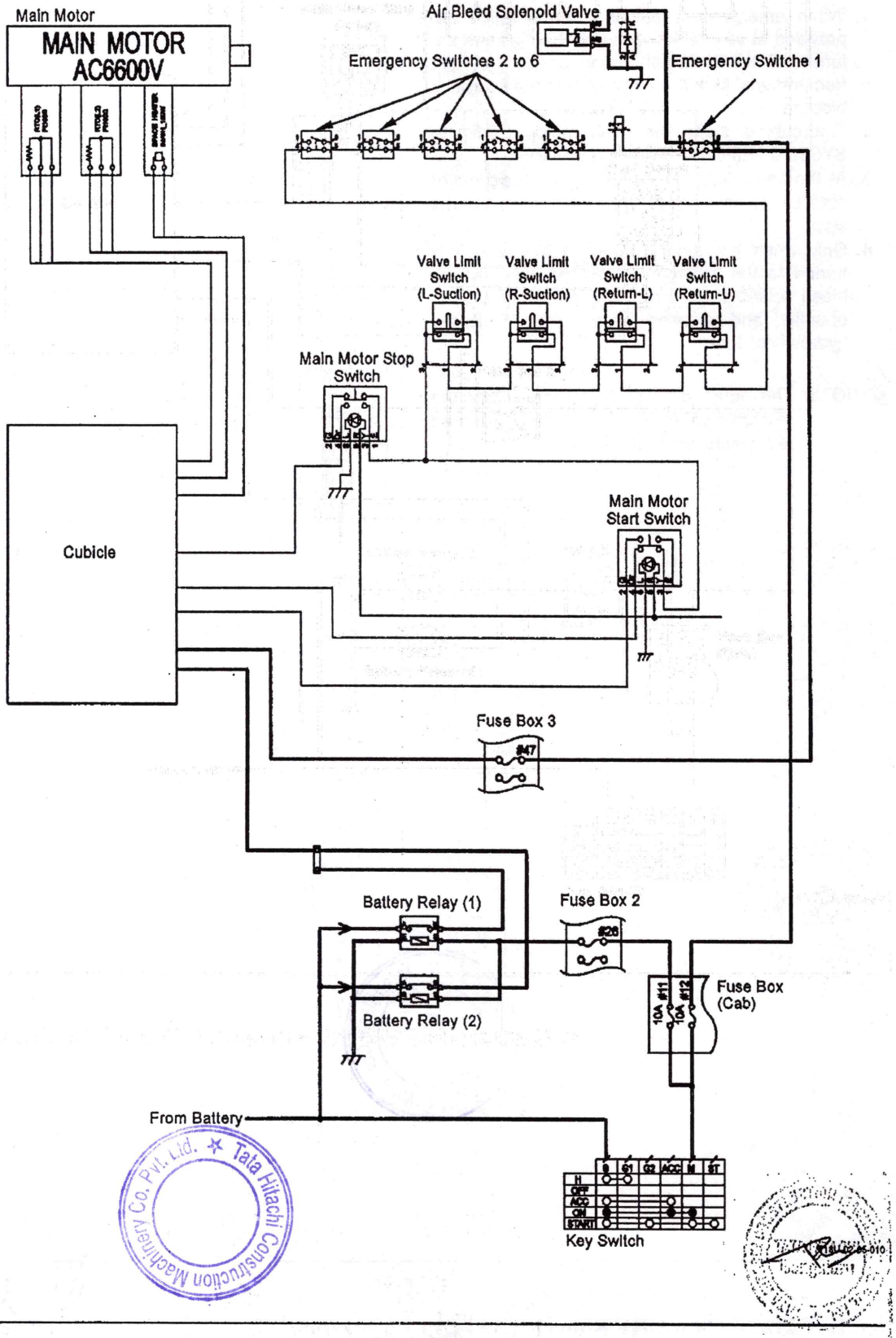

SYSTEM / Electric System

Main Motor Stop by Valve Limit Switch

1. The valve limit switch is provided to the butterfly valves in the suction piping and the return piping. When the butterfly valve is closed, the valve limit switch is turned OFF, so that current from terminal M in the key switch to the cubicle is blocked.
2. The cubicle stops the main motor. (Refer to SYSTEM / Electrical System (6600 V).)
3. At the same time, as current to the main motor start switch is blocked, the main motor cannot start.

NOTE: The figure on the next page shows the status when the valve limit switch (return-U) is turned OFF.

SYSTEM / Electric System

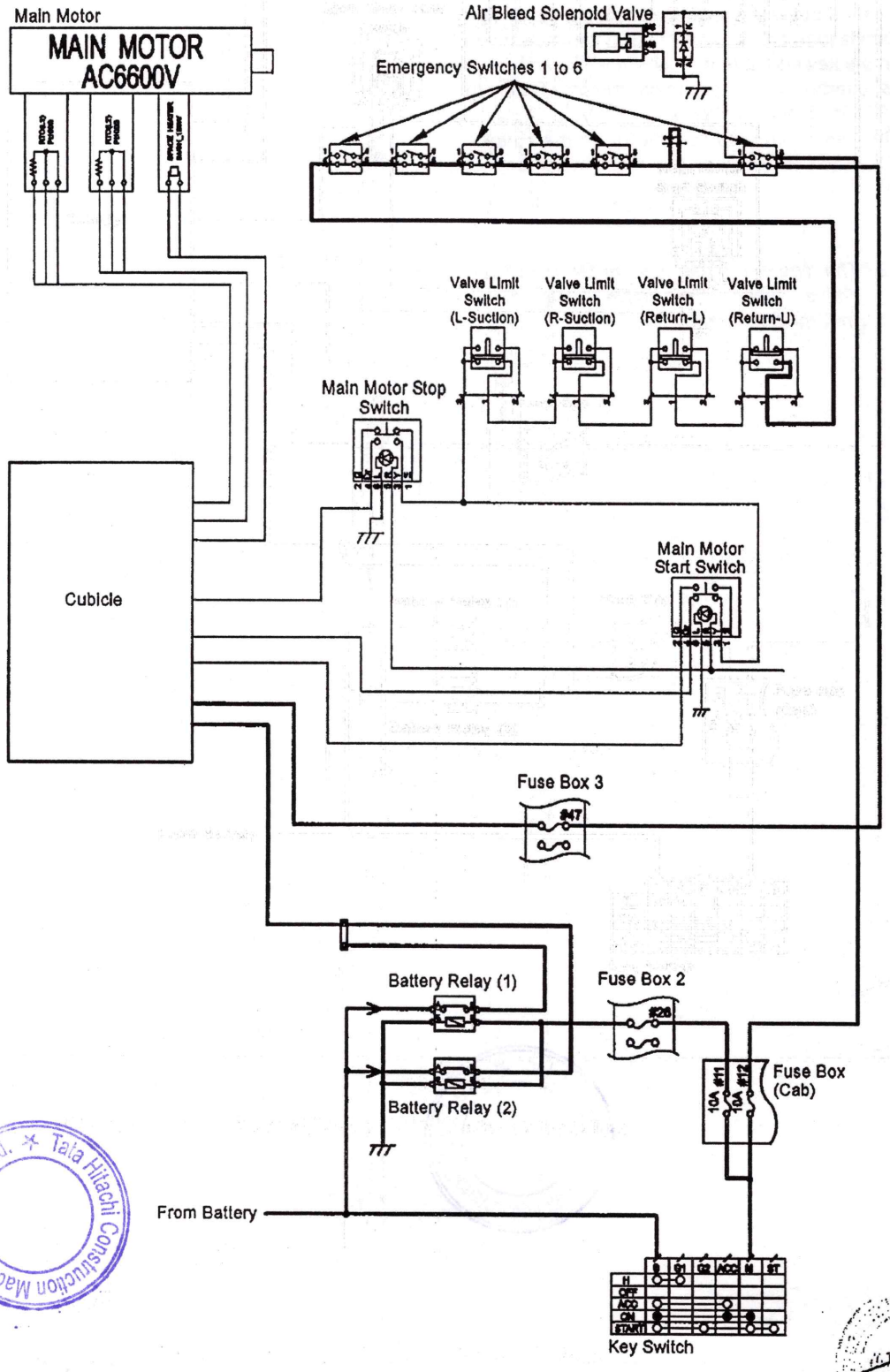

SYSTEM / Electric System

Main Motor Stopping by Main Motor Stop Switch

1. When the main motor stop switch is pushed, current from terminal M in the key switch flows to the cubicle through the switch where the main motor stop switch was pushed.
2. The cubicle recognizes that the main motor stop switch has been pushed and stops the main motor. (Refer to SYSTEM / Electrical System (6600 V).)

NOTE: The figure on the next page shows the status when the main motor stop switch is pushed.

SYSTEM / Electric System

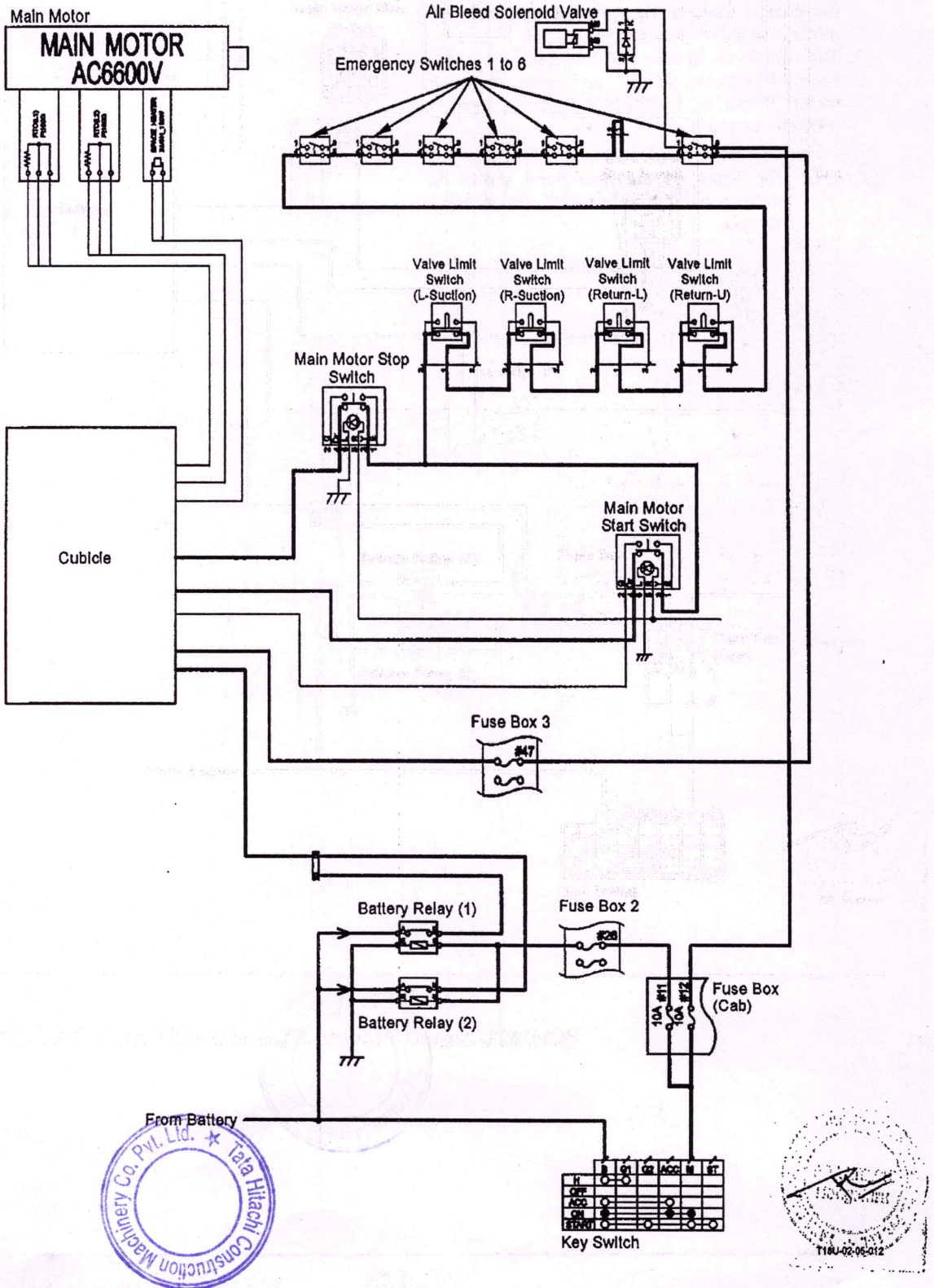

SYSTEM / Electric System

DELAY CIRCUIT FOR POWER OFF

Even when the key switch is turned OFF with the entrance light ON, the entrance light remains ON for a specified time (Delayed time before light-off set by the monitor display). Therefore, the light remains ON when getting off the machine at night.

1. When the key switch is in the ON position, current from terminal M in the key switch flows to MC through fuses #15 and #26. Therefore, MC recognizes that the key switch is in the ON position. MC flows current from terminal #2 of the delayed power OFF relay to the ground inside.
2. The delayed power OFF relay contact remains ON. Current from the cubicle is supplied to the loads through battery relays 1 and 2.
3. When the key switch is turned OFF, current which flows from terminal M in the key switch to MC is blocked at the same time as the main motor stops.
4. Even if MC recognizes that the key switch is turned OFF, MC does not shut down current from terminal #2 of the delayed power OFF relay for a period set by the monitor display.
   Therefore, the delayed power OFF relay remains ON.
5. While the delayed power OFF relay is ON, current continues to flow to the coils of battery relays 1 and 2, and battery relays 1 and 2 remain ON. Therefore, the 24 V DC power is supplied from the cubicle and the entrance light is kept ON.

Tata Hitachi Construction Machinery Co. Pvt. Ltd.

SYSTEM / Electric System

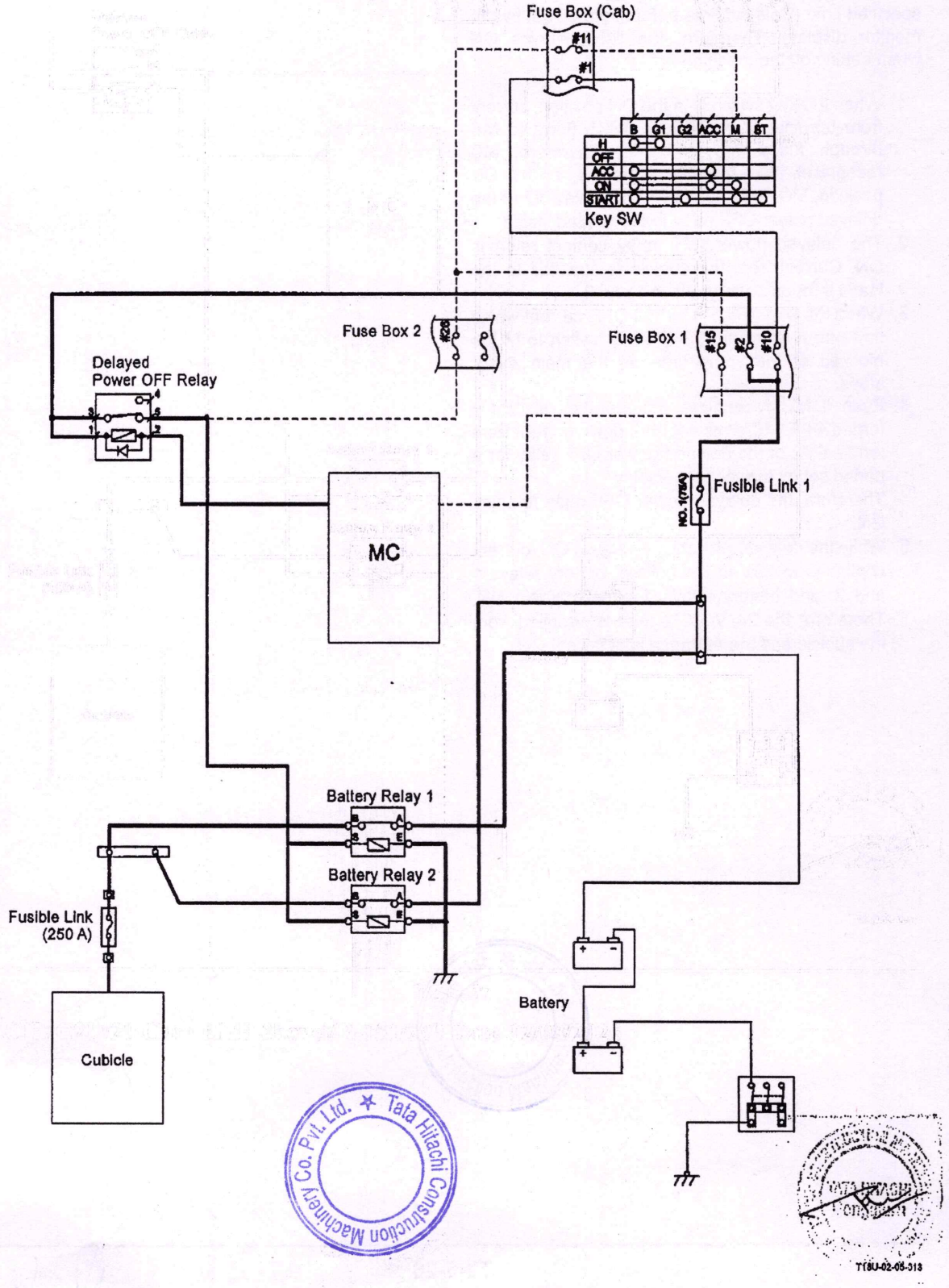

Tata Hitachi Construction Machinery Co. Pvt. Ltd.

SYSTEM / Electric System

(Blank)

SYSTEM / Electrical System (6600 V)

OUTLINE

The cubicle installed on the machine receives the high-voltage power source at AC 6600 V through the slip ring from the external cubicle.
The cubicle installed on the machine performs various controls and supplies the power source to the following parts.

- Main motor (three-phase AC 6600 V)
- Cab heater power circuit (three-phase AC 210 V)
- Machine power circuit (DC 24 V)

Tata Hitachi Construction Machinery Co. Pvt. Ltd.

SYSTEM / Electrical System (6600 V)

CONSTRUCTION

The cubicle installed on the machine is divided into the high-voltage cubicle and the low-voltage cubicle.

Each device in the cubicle is explained here.

High-Voltage Cubicle:

- Main Switch
  Is the power switch on the machine.
- Main Motor (IM)
  Is the power plant of the machine, equivalent to the engine.
- Transformer VT
  Converts AC 6600 V to AC 110 V and supplies AC 110 V to the main motor control device, and the cubicle heater.
- Transformer TR
  Converts AC 6600 V to AC 210 V and supplies AC 210 V to the 210 V power lamp circuit, the 210 V voltage detection circuit, the cab heater control box, and AC/DC converters (RECT1, RECT2).
- Main Motor Switch
  Is turned ON/OFF according to the signals from the main motor control device, and supplies AC 6600 V to the main motor.
- Detector
  Monitors the three-phase current in the main motor circuit and sends its state to the main motor control device.

Low-Voltage Cubicle:

- Main Motor Control Device
  Consists of various contacts and relays which turn the main motor switch ON-OFF.
  AC 110 V from transformer VT is supplied as the power source.
  Receive the signal from the switch and the detector in the cab and control the main motor switch in order to turn ON/OFF.
- Converters RECT1 and RECT2
  Convert AC 210 V to DC 24 V and supply DC 24 V to the switch in the cab and the electrical circuit on the machine.

Others:

- Switches in Cab
  Are the main motor start switch, the main motor stop switch, and the emergency switch. The power converted to DC 24 V by converters (RECT1, RECT2) is supplied to these switches.
  When operating the main motor start switch, the main motor stop switch, or the emergency switch, the DC 24 V circuit is connected to the main motor control device.
- Switches in Cubicle
  Are the main motor start switch, the main motor stop switch, and the door switch.
  The main motor start switch and the main motor stop switch turn the main motor control devices ON/OFF respectively.
  Is connected to the main motor control circuit when the door switch detects the door open of the high-voltage control panel. (Refer to INTERLOCK CIRCUIT.)
- Power Terminal 24 V
  Is the relay terminal when power is supplied from the low-voltage cubicle to each part of the machine.

Tata Hitachi Construction Machinery Co. Pvt. Ltd.

SYSTEM / Electrical System (6600 V)

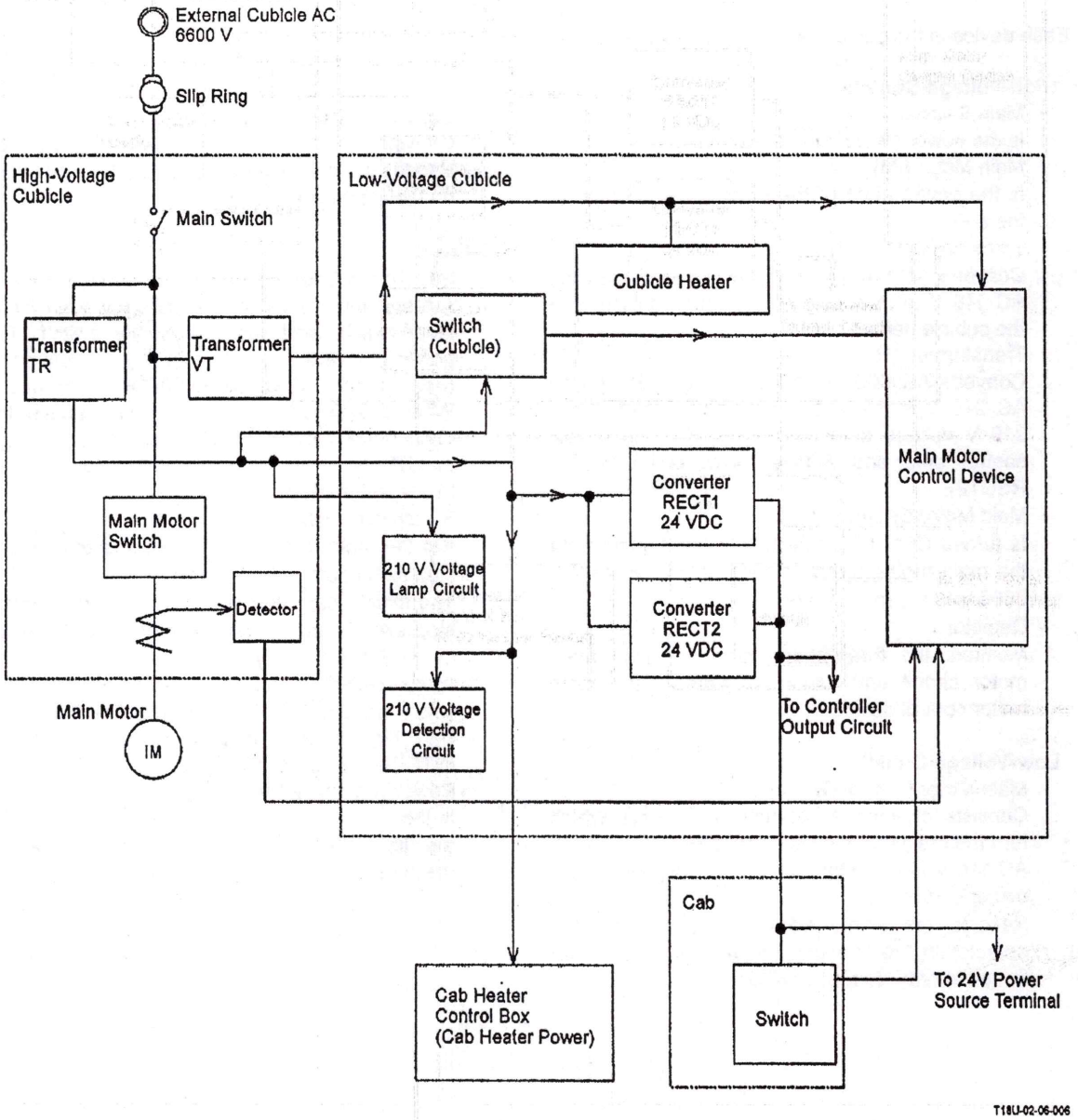

Tata Hitachi Construction Machinery Co. Pvt. Ltd.

SYSTEM / Electrical System (6600 V)

HIGH-VOLTAGE CIRCUIT

Outline

High voltage of three-phase AC 6600 V, which is supplied from the external cubicle is processed in the high-voltage cubicle installed on the machine as follows and is supplied to each part.

- AC 6600 V is supplied to the main motor (IM).
- AC 6600 V is converted to 210 V and supplied to the low-voltage cubicle.
- AC 6600 V is converted to 110 V and supplied to the low-voltage cubicle.

High voltage at 6600 V from the external cubicle is supplied to main switch DS (3P) through the slip ring of the center joint. When turning main switch DS (3P) ON, power is supplied to each circuit.

Main Motor System

Voltage at 6600 V is supplied to contact 52 through current-limiting fuse PF1. When turning the main motor start switch ON in the cab, contact 52 is turned ON and power is supplied to main motor (IM) through reactor ST.X so that main motor (IM) rotates. At this time, reactor ST.X reduces current by 50 % and reduces rushing current when starting main motor (IM).

Contact 42-1 is turned ON in five seconds. Power voltage is supplied to main motor (IM) directly. Main motor (IM) rotates at the maximum speed. (Refer to START/STOP CIRCUIT.)

Detector 46CT monitors the change of current in the circuit. When the abnormality occurs, detector 46CT turns contact 52 OFF and stops main motor (IM). (Refer to INTERLOCK CIRCUIT.)

210 V Convert System

- Power at 6600 V from main switch DS(3P) is converted to 210 V in transformer TR through current-limiting fuse PF2. Then, the converted voltage (210 V) is supplied to the low-voltage cubicle and supplied to the cab heater and each part of the machine as the power source.

110 V Convert System

Power at 6600 V from main switch DS(3P) is converted to 110 V in transformer VT through current-limiting fuse PF1 and current-limiting fuse 1APF. Then, the converted voltage (110 V) is divided into two, and is supplied to the low-voltage cubicle. The current to current-limiting fuse PF1 is supplied to the heater circuit in the motor as the power source. The current to current-limiting fuse PF2 is supplied to the start / stop circuit as the power source. (Refer to START / STOP CIRCUIT.)

Protection of Electrical System

- In case lightning strikes during operation, lightning current is released through lightning arrestor LA.

Tata Hitachi Construction Machinery Co. Pvt. Ltd.

SYSTEM / Electrical System (6600 V)

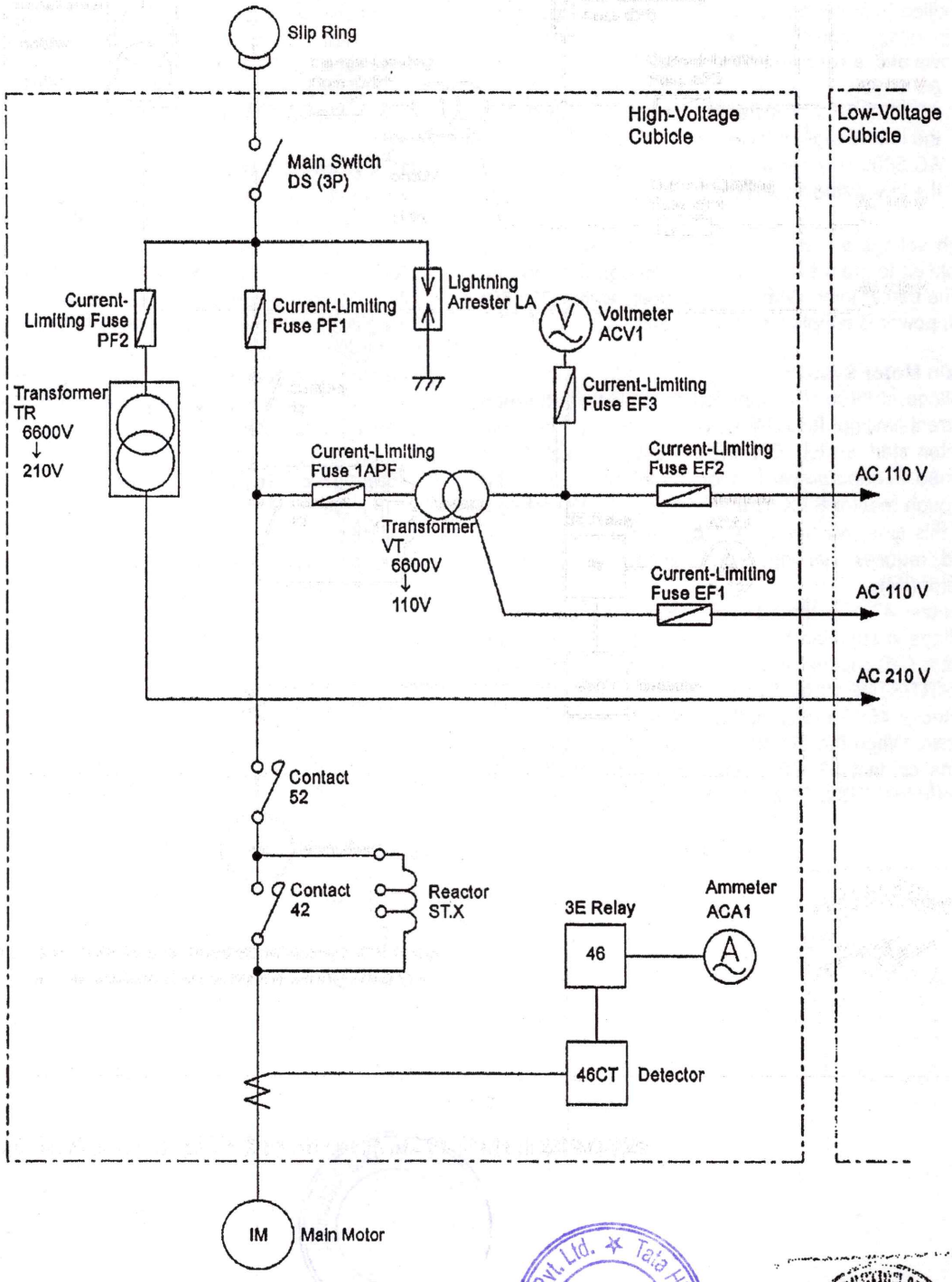

NOTE: Symbols in the illustration match the ones in the electrical connection wiring diagram.

Tata Hitachi Construction Machinery Co. Pvt. Ltd.

SYSTEM / Electrical System (6600 V)

MAIN MOTOR START CIRCUIT

- Selection Switch COS: REMOTE

1. When pushing main motor start switch PBS1 in the controller output circuit, coil 4M is excited by current from converters (RECT 1 and RECT 2).
2. Contact 4M in the contact coil circuit is closed. Current from transformer VT flows to contact coil 52.
3. Contact coil 52 is excited. Main contact 52 and contacts 52 in the main motor start control circuit and the hour meter output circuit are closed. Contact 52 in the trip coil 42-1 circuit is opened.
4. When main contact 52 is closed, the power current (AC 6600 V) flows to the main motor through main contact 52 and reactor ST.X. Reactor ST.X functions to control rush current when starting the main motor to approx. 50 % (200 to 300 A).
5. When contact 52 in the hour meter output circuit is closed, current from transformer VT flows to coil 52X through contact 52.
6. Coil 52X is excited. Contacts 52X in the controller output circuit and the overheat detection circuit are closed. Contacts 52X in the stop lamp circuit, the cubicle heater circuit, and the main motor heater circuit are opened.
7. As contact 52X in the controller output circuit is closed, current from converter (RECT1 and RECT2) flows to terminal 76-25 of MC and terminal #2 of the hour meter.
8. Therefore, MC sends the operation signal of the main motor to IDU and ELU.
   At the same time, the hour meter is operated.
9. As contact 52X in the overheat detection circuit is closed, the overheat detection for the main motor becomes possible.
10. When contact 52X in the stop lamp circuit is opened, current from transformer VT is blocked. Stop lamp GL1 goes off.
11. When contact 52X in the main motor heater circuit is opened, current from transformer VT is blocked. The main motor heater stops and heater OFF motor lamp RL-H goes off.
12. When contact 52 in the main motor start control circuit is closed, current from transformer VT flows to timer 2T.

Tata Hitachi Construction Machinery Co. Pvt. Ltd.

SYSTEM / Electrical System (6600 V)

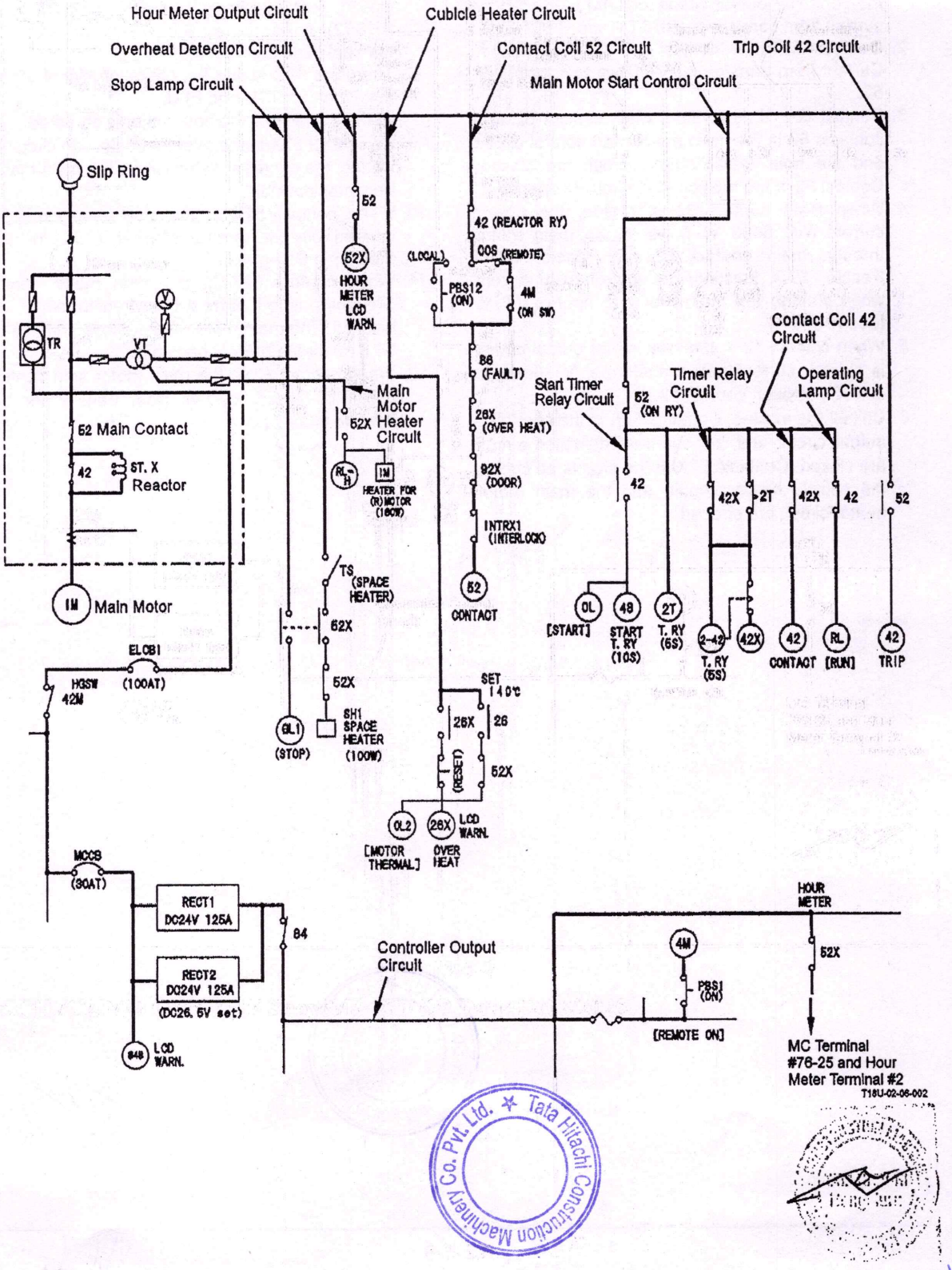

Tata Hitachi Construction Machinery Co. Pvt. Ltd.

SYSTEM / Electrical System (6600 V)

13. Timer 2T is operated. Contact 2T is closed in about five seconds.
14. When contact 2T is closed, current from transformer VT flows to coil 42X.
15. Coil 42X is excited. Contacts 42X in the contact coil 42 circuit and the timer relay 2-42 circuit are closed.
16. When contact 42X in the contact coil 42 circuit is closed, current from transformer VT flows to contact coil 42.
17. When contact coil 42 is excited, main contact 42 and contact 42 in the operating lamp circuit are closed. Contact 42 in the start timer relay circuit is opened.
18. When main contact 42 is closed, the power current (AC 6600 V) flows to the main motor without passing through reactor ST.X. The main motor runs under normal operation.
19. When contact 42 in the start timer relay circuit is opened, current from transformer VT is blocked. Start lamp OL goes off.
20. When contact 42 in the operating lamp circuit is closed, current from transformer VT flows to operating lamp RL. Operating lamp RL lights.
21. When contact 42X in the timer relay 2-42 circuit is closed, current from transformer VT flows to timer relay 2-42.
22. Timer 2-42 is operated. Contact 2-42 is opened in about five seconds.
23. Therefore, current to coil 42X is blocked. Coil 42X is stopped exciting.
24. When contact 42X in the contact coil 42 circuit is opened, current from transformer VT is blocked. Contact coil 42 is stopped exciting. However, main contact 42 is kept closed as main contact 42 has the holding function.

Tata Hitachi Construction Machinery Co. Pvt. Ltd.

SYSTEM / Electrical System (6600 V)

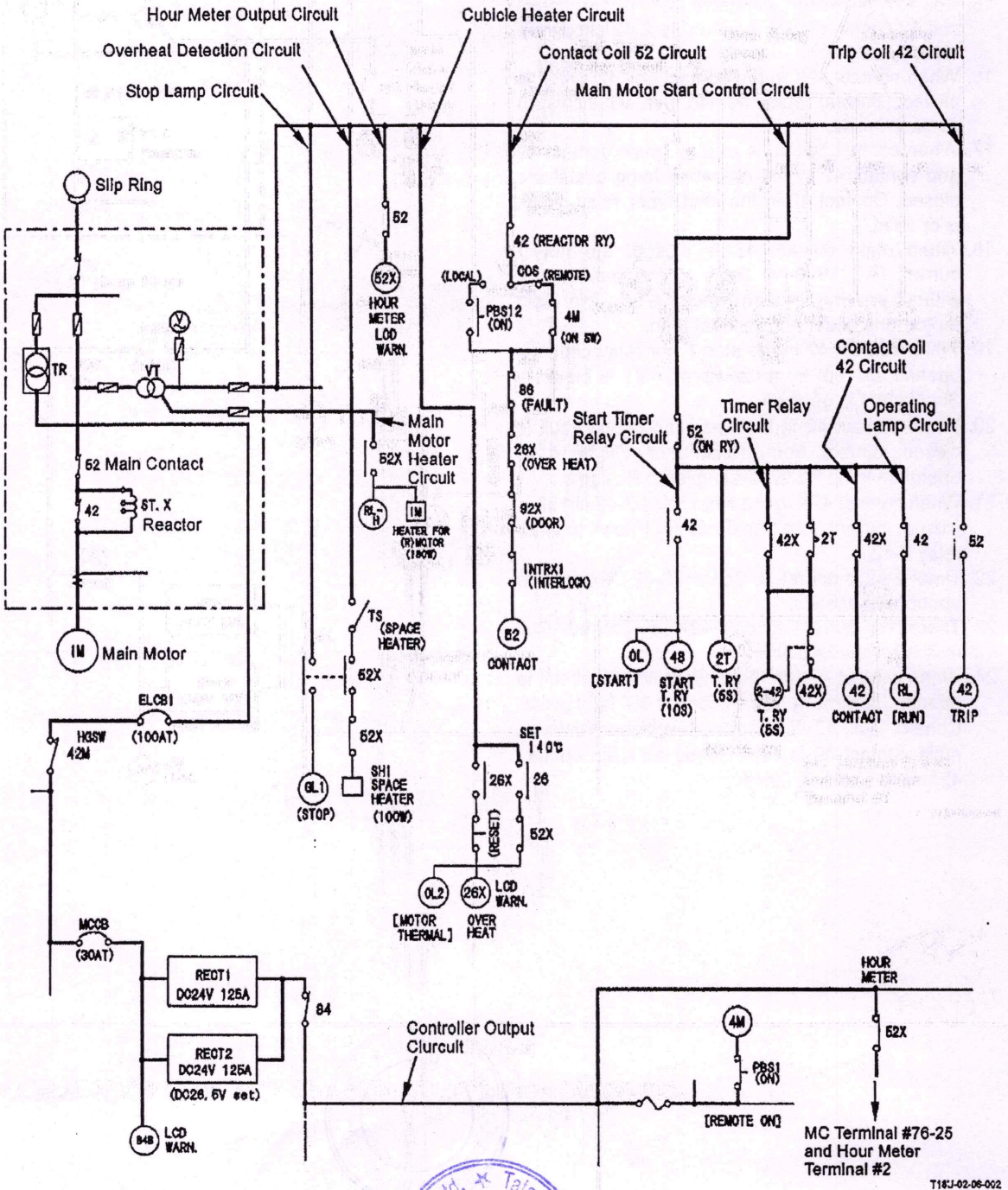

Tata Hitachi Construction Machinery Co. Pvt. Ltd.

SYSTEM / Electrical System (6600 V)

- Selection Switch COS: LOCAL

1. When pushing main motor start switch PBS12 of the contact coil 52 circuit, current from transformer VT flows to contact coil 52.
2. Contact coil 52 is excited. Main contact 52 and contacts 52 in the main motor start control circuit and the hour meter output circuit are closed. Contact 52 in the trip coil 42 circuit is opened.
3. When main contact 52 is closed, the power current (AC 6600 V) flows to the main motor through main contact 52 and reactor ST.X. Reactor ST.X functions to control rush current when starting the main motor to approx. 50 % (200 to 300 A).
4. When contact 52 in the hour meter output circuit is closed, current from transformer VT flows to coil 52X through contact 52.
5. Coil 52X is excited. Contacts 52X in the controller output circuit and the overheat detection circuit are closed. Contacts 52X in the stop lamp circuit, the cubicle heater circuit, and the main motor heater circuit are opened.
6. As contact 52X in the controller output circuit is closed, current from converters (RECT1 and RECT2) flow to terminal 76-25 of MC and terminal #2 of the hour meter.
7. Therefore, MC sends the operation signal of the main motor to IDU and ELU.
   At the same time, the hour meter is operated.
8. As contact 52X in the overheat detection circuit is closed, the overheat detection for the main motor becomes possible.
9. When contact 52X in the stop lamp circuit is opened, current from transformer VT is blocked. Stop lamp GL goes off.
10. When contact 52X in the main motor heater circuit is opened, current from transformer VT is blocked. The main motor heater stops and heater OFF motor lamp RL-H goes off.
11. When contact 52 in the main motor start control circuit is closed, current from transformer VT flows to timer 2T.

SYSTEM / Electrical System (6600 V)

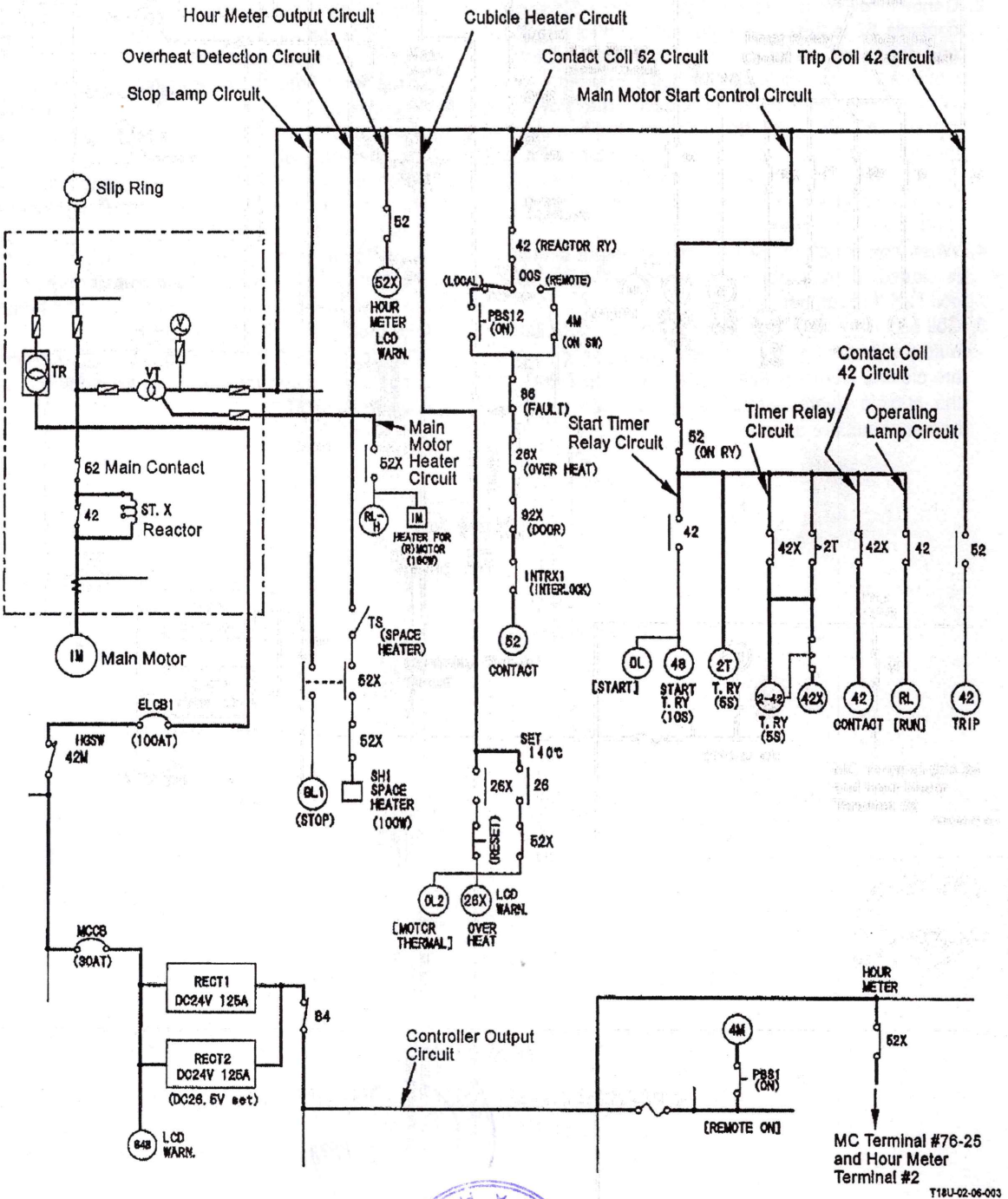

Tata Hitachi Construction Machinery Co. Pvt. Ltd.

SYSTEM / Electrical System (6600 V)

12. Time 2T is operated. Contact 2T is closed in about five seconds.
13. When contact 2T is closed, current from transformer VT flows to coil 42X.
14. Coil 42X is excited. Contacts 42X in the contact coil 42 circuit and the timer relay 2-42 circuit are closed.
15. When contact 42X in the contact coil 42 circuit is closed, current from transformer VT flows to contact coil 42.
16. When contact coil 42 is excited, main contact 42 and contact 42 in the operating lamp circuit are closed. Contact 42 in the start timer relay circuit is opened.
17. When main contact 42 is closed, the power current (AC 6600 V) flows to the main motor without passing through reactor ST.X. The main motor runs under normal operation.
18. When contact 42 in the start timer relay circuit is opened, current from transformer VT is blocked. Stop lamp OL goes off.
19. When contact 42 in the operating lamp circuit is closed, current from transformer VT flows to operating lamp RL. Operating lamp RL1 lights.
20. When contact 42X in the timer relay 2-42 circuit is closed, current from transformer VT flows to timer relay 2-42.
21. Timer 2-42 is operated. Contact 2-42 is opened in about five seconds.
22. Therefore, current to coil 42X is blocked. Coil 42X is stopped exciting.
23. When contact 42X in the contact coil 42 circuit is opened, current from transformer VT is blocked. Contact coil 42 is stopped exciting. However, main contact 42 is kept closed as main contact 42 has the holding function.

Tata Hitachi Construction Machinery Co. Pvt. Ltd.

SYSTEM / Electrical System (6600 V)

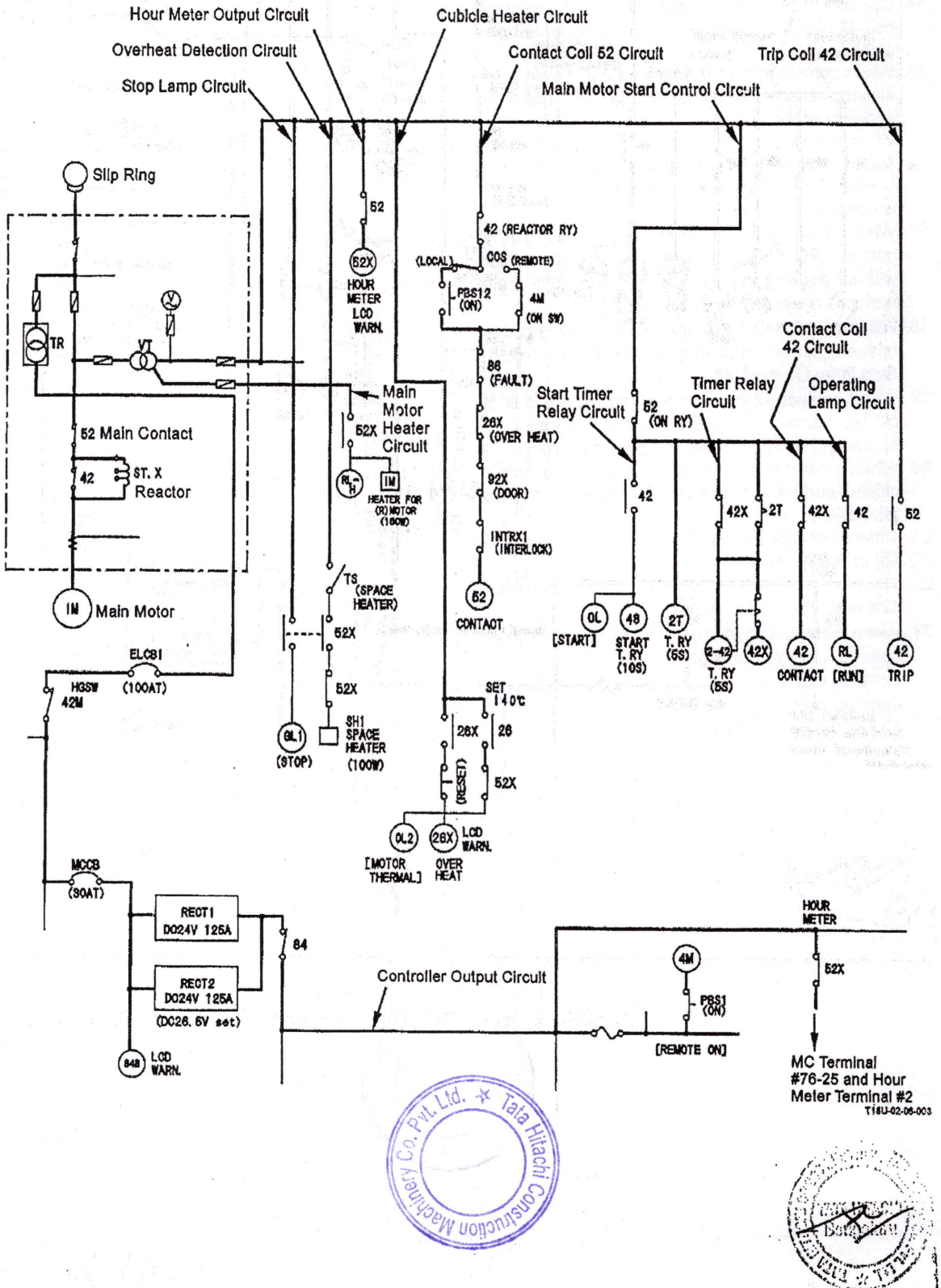

Tata Hitachi Construction Machinery Co. Pvt. Ltd.

SYSTEM / Electrical System (6600 V)

MAIN MOTOR STOP CIRCUIT

- Inside of Cab

1. When pushing main motor stop switch PBS2 of the controller output circuit, coil 5M is excited by current from converters (RECT1 and RECT2).
2. Contact 5M in the trip coil circuit is closed. Current from transformer VT flows to trip coil 52.
3. Trip coil 52 is excited. Main contact 52 and contacts 52 in the main motor start control circuit and the hour meter output circuit are opened. Contact 52 in the trip coil 42 circuit is closed.
4. When main contact 52 is opened, the power current (AC 6600 V) is blocked. The main motor stops.
5. When contact 52 in the hour meter output circuit is opened, current from transformer VT is blocked. Coil 52X is stopped exciting.
6. When coil 52X is stopped exciting, contacts 52X in the controller output circuit and the overheat detection circuit are opened. Contacts 52X in the stop lamp circuit, the cubicle heater circuit, and the main motor heater circuit are closed.
7. As contact 52X in the controller output circuit is opened, current, from converters (RECT1 and RECT2) are stopped flowing to terminal 76-25 of MC and terminal #2 of the hour meter.
8. Therefore, MC stops sending the operation signal of the main motor to IDU and ELU.
   At the same time, the hour meter stops.
9. When contact 52X in the stop lamp circuit is closed, current from transformer VT flows. Stop lamp GL lights.
10. When contact 52X in the main motor heater circuit is closed, current from transformer VT flows to the main motor heater and heater OFF motor lamp RL-H. The main motor heater is operated and heater OFF motor lamp RL-H lights.
11. When contact 52 in the trip coil 42-1 circuit is closed, current from transformer VT flows to trip coil 42.
12. When trip coil 42 is excited, main contact 42 in reactor ST.X and contact 42 in the contact coil circuit are opened.

Tata Hitachi Construction Machinery Co. Pvt. Ltd.

SYSTEM / Electrical System (6600 V)

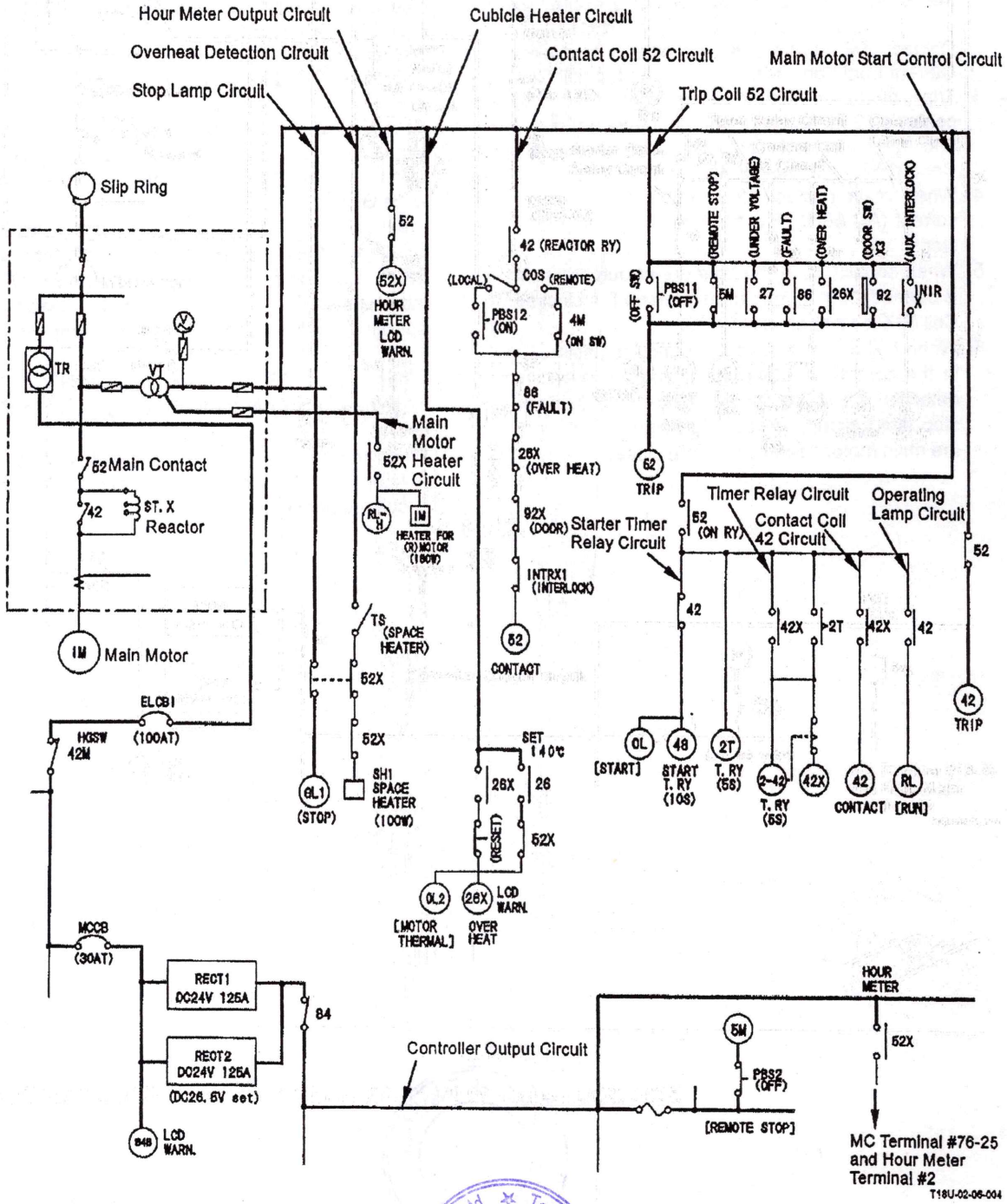

Tata Hitachi Construction Machinery Co. Pvt. Ltd.

SYSTEM / Electrical System (6600 V)

- Inside of Cubicle

1. When pushing main motor stop switch PBS11 of the trip coil 52 circuit, current from transformer VT flows to trip coil 52.
2. Trip coil 52 is excited. Main contact 52 and contacts 52 in the main motor start control circuit and the hour meter output circuit are opened. Contact 52 in the trip coil 42 circuit is closed.
3. When main contact 52 is opened, the power current (AC 6600 V) is blocked. The main motor stops.
4. When contact 52 in the hour meter output circuit is opened, current from transformer VT is blocked. Coil 52X is stopped exciting.
5. When coil 52X is stopped exciting, contacts 52X in the controller output circuit and the overheat detection circuit are opened. Contacts 52X in the stop lamp circuit, the cubicle heater circuit, and the main motor heater circuit are closed.
6. As contact 52X in the controller output circuit is opened, current from converters (RECT1 and RECT2) are stopped flowing to terminal 76-25 of MC and terminal #2 of the hour meter.
7. Therefore, MC stops sending the operation signal of the main motor to IDU and ELU.
   At the same time, the hour meter stops.
8. When contact 52X in the stop lamp circuit is closed, current from transformer VT flows. Stop lamp GL1 lights.
9. When contact 52X in the main motor heater circuit is closed, current from transformer VT flows to the main motor heater and heater OFF motor lamp RL-H. The main motor heater is operated and heater OFF motor lamp RL-H lights.
10. When contact 52 in the trip coil 42 circuit is closed, current from transformer VT flows to trip coil 42.
11. When trip coil 42 is excited, main contact 42 in reactor ST.X and contact 42 in the contact coil circuit are opened.

Tata Hitachi Construction Machinery Co. Pvt. Ltd.

SYSTEM / Electrical System (6600 V)

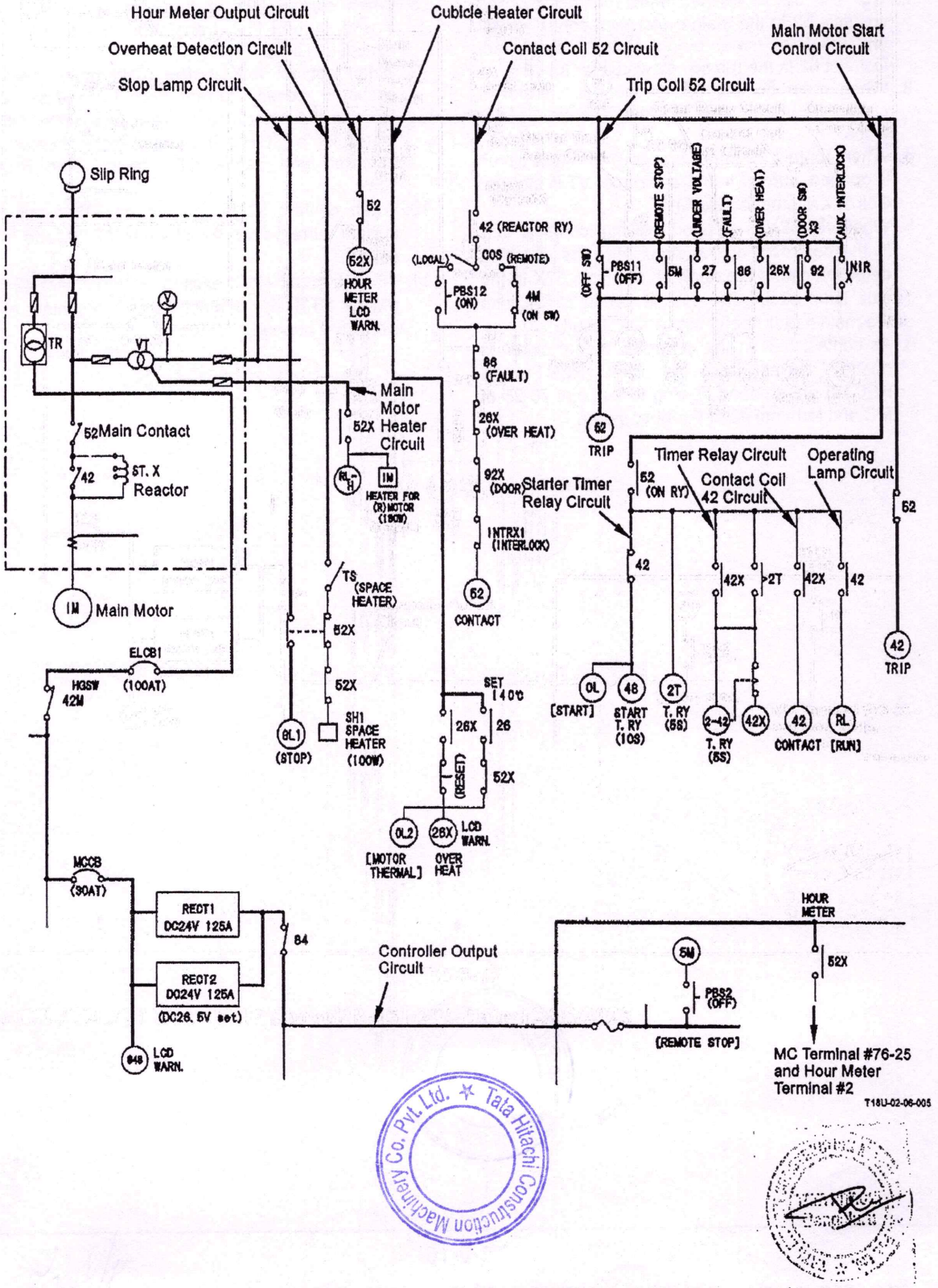

Tata Hitachi Construction Machinery Co. Pvt. Ltd.

SYSTEM / Electrical System (6600 V)

CAB HEATER POWER CIRCUIT

1. Current from transformer TR flows to the cab heater control box through breaker MCCB2 and electric power is supplied to the cab heater.
2. When the cab heater warning switch is closed, current flows from transformer TR to coil CHM. Then, coil CHM is excited and contact CHM in the controller output circuit is closed.
3. As contact CHM in the controller output circuit is closed, current from converters (RECT1, RECT2) flow to terminal 76-42 of MC.
4. When the cab heater warning switch is opened, coil CHM is not operated. Then, contact CHM in the controller output circuit is opened.
5. As contact CHM in the controller output circuit is opened, current which flow from converters (RECT1, RECT2) to terminal 76-42 of MC are blocked. Therefore, MC sends the abnormal signal of the cab heater to IDU.

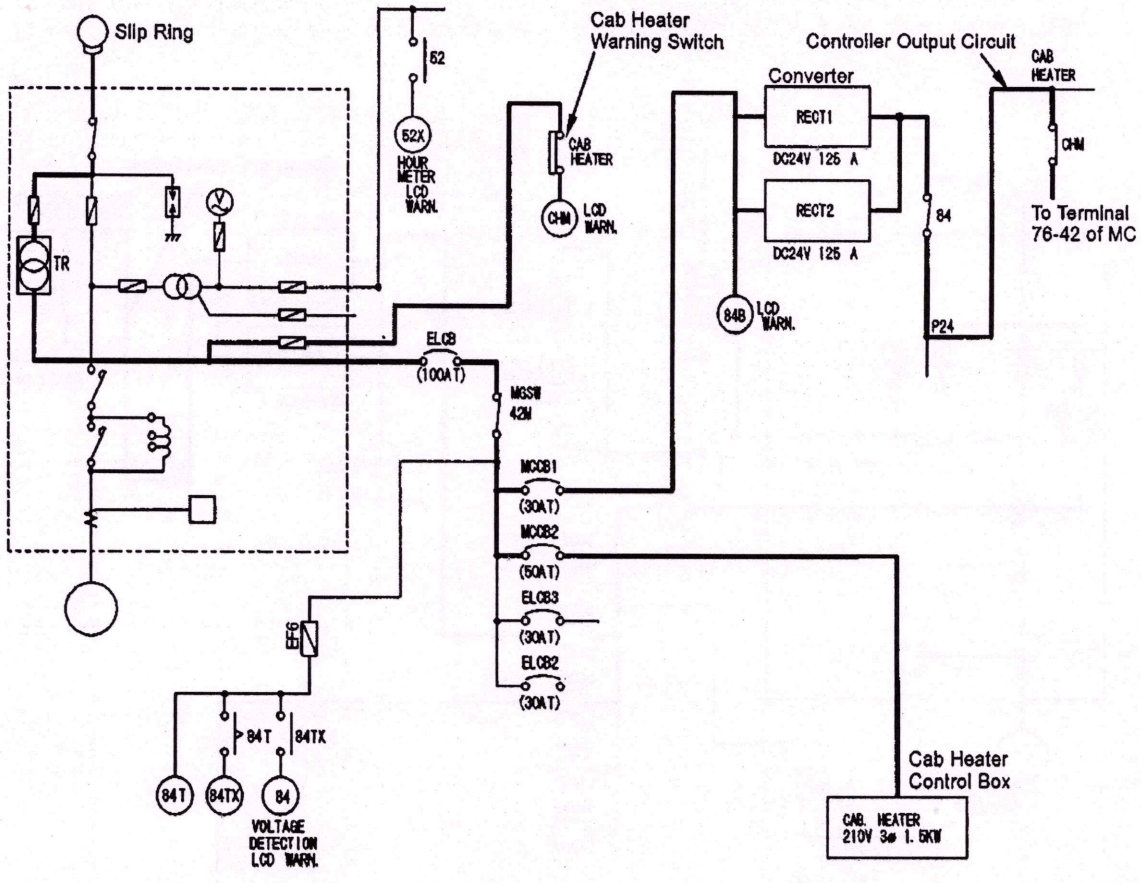

SYSTEM / Electrical System (6600 V)

BATTERY CHARGE DETECTION CIRCUIT

1. Current from transformer TR flows to coil 84B through breaker MCCB1.
2. Coil 84B is excited and contact 84B in the controller output circuit is closed.
3. As contact 84B in the controller output circuit is closed, current from converters (RECT1, RECT2) flow to terminal 76-12 of MC.
4. When detecting the failure of the battery circuit, coil 84B stops. Then, contact 84B in the controller output circuit is opened.
5. Consequently, current which flows to terminal 76-12 of MC is blocked. Therefore, MC sends the battery charge abnormal signal to IDU.

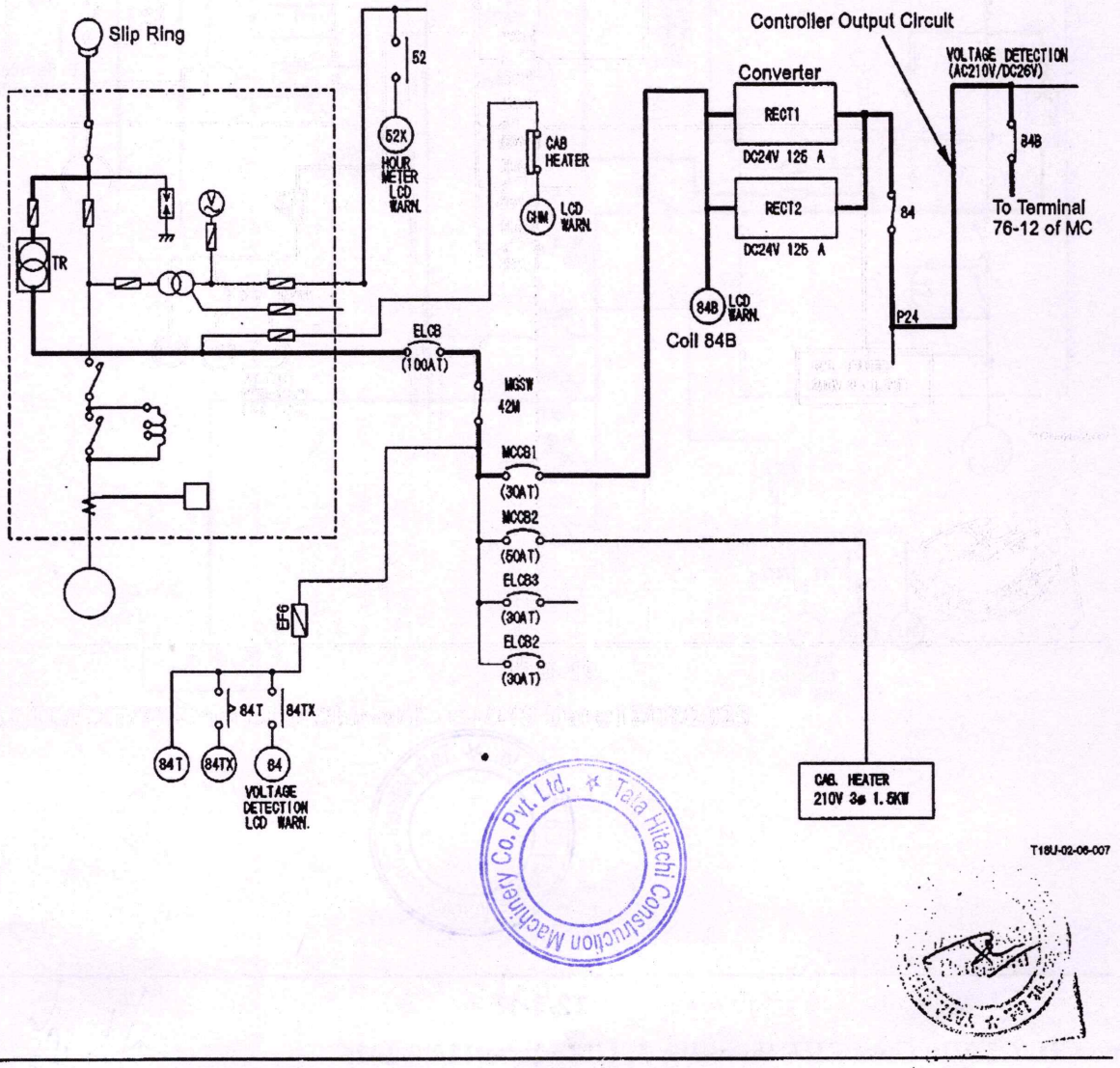

SYSTEM / Electrical System (6600 V)

210 V VOLTAGE DETECTION CIRCUIT

1. Current from transformer TR flows to coil 84T through breaker ELCB.
2. Coil 84T is excited and contact 84T is closed.
3. Current from transformer TR flows to coil 84TX through contact 84T.
4. Coil 84TX is excited and contact 84TX is closed.
5. Current from transformer TR flows to coil 84 through contact 84TX.
6. Coil 84 is excited so that main contact 84 and contact 84 in the controller output circuit are closed.
7. As contact 84 in the controller output circuit is closed, current from converters (RECT1, RECT2) flow to terminal 76-14 of MC.
8. When detecting the failure of the 210 V voltage detection circuit, coil 84T stops. Therefore, contact 84T and contact 84TX are opened. Consequently, as main contact 84 in the controller output circuit is opened, electric power is not supplied to the controller output circuit.
9. Current which flows to terminal 76-14 is blocked so that MC the sends the 210 V power source abnormal signal to IDU.

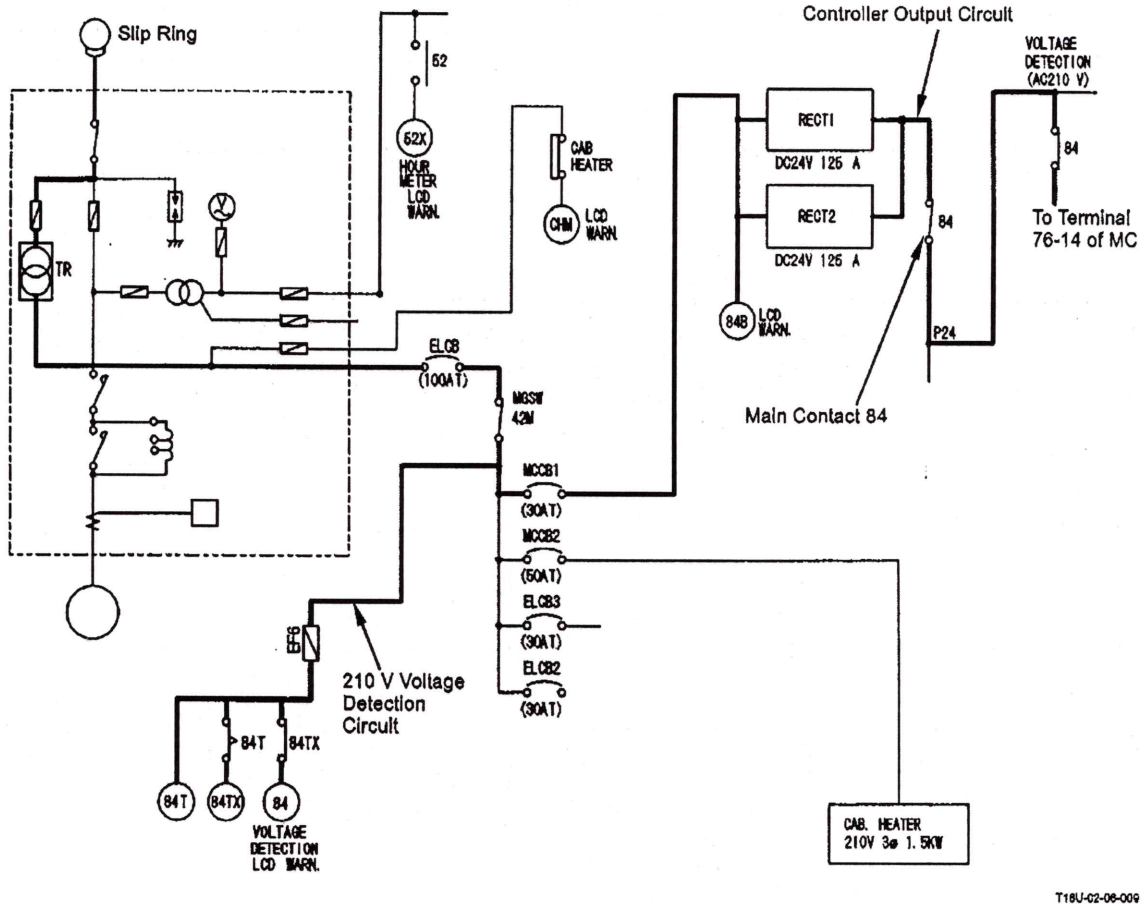

SYSTEM / Electrical System (6600 V)

(Blank)

SYSTEM / Electrical System (6600 V)

CABLE DRUM FAILURE DETECTION CIRCUIT

1. When the cable drum warning switch is closed, current flows from the cable drum to coil CDM and coil CDM is excited.
2. Then, contact CDM in the controller output circuit is closed.
3. As contact CDM in the controller output circuit is closed, current flow from converters (RECT1, RECT2) to terminal 76-1 of MC.
4. Therefore, MC sends the cable drum normal signal to IDU.
5. When detecting the failure of the cable drum, the cable drum warning switch is opened. Then, current which flows from the cable to coil CDM is blocked.
6. As coil CDM is not excited, contact CDM in the controller output circuit is opened.
7. Therefore, current which flow from converters (RECT1, RECT2) to terminal 76-1 of MC are blocked.
8. MC sends of the cable drum abnormal signal to IDU.

SYSTEM / Electrical System (6600 V)

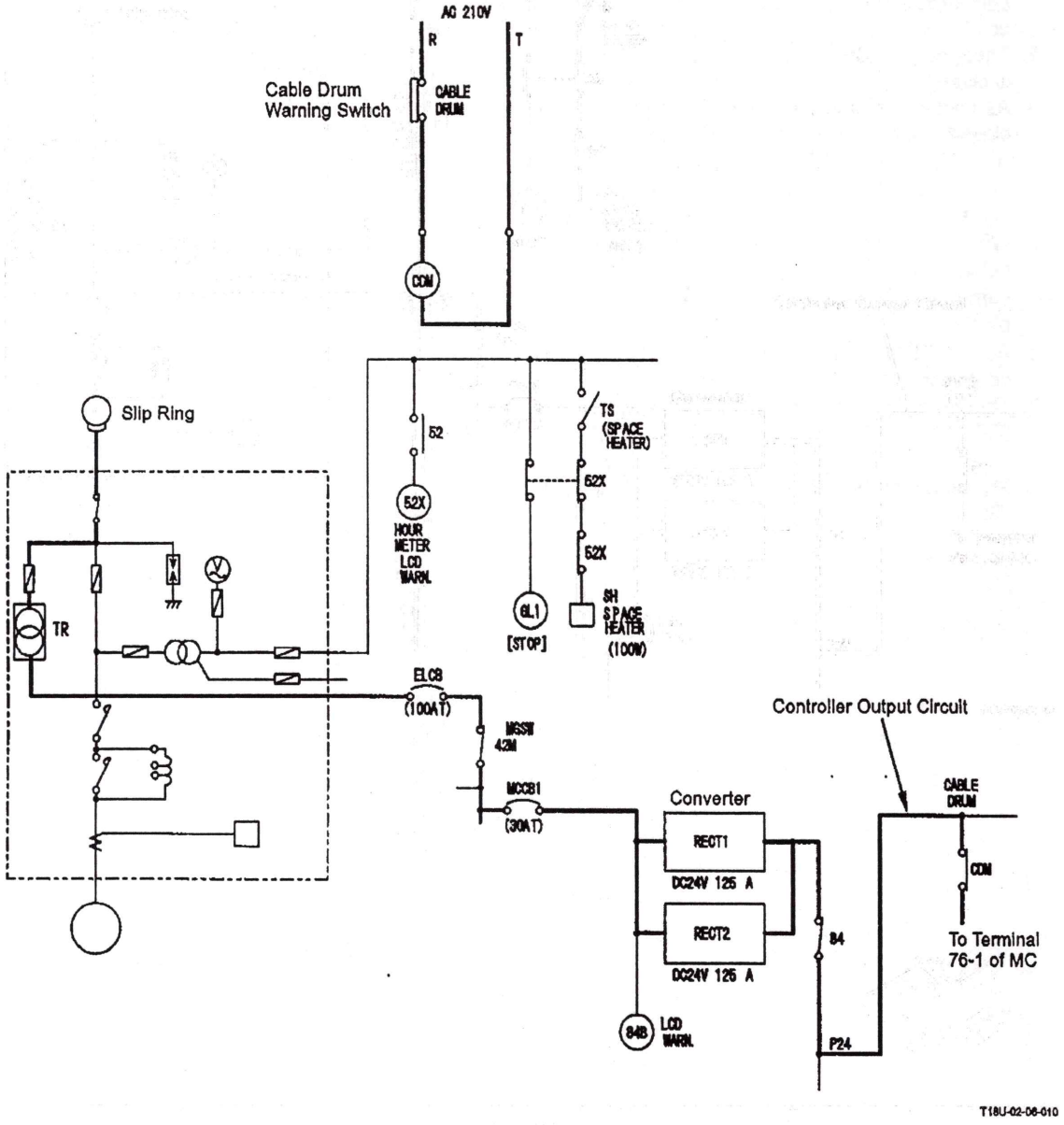

SYSTEM / Electrical System (6600 V)

CUBICLE SPACE HEATER START CIRCUIT

NOTE: The cubicle space heater cannot start when the main motor is operated. (Refer to MAIN MOTOR START CIRCUIT.)

1. Turn the space heater switch ON.
2. Current from transformer VT flows to the space heater through contact 52X (2 places) so that the space heater starts.

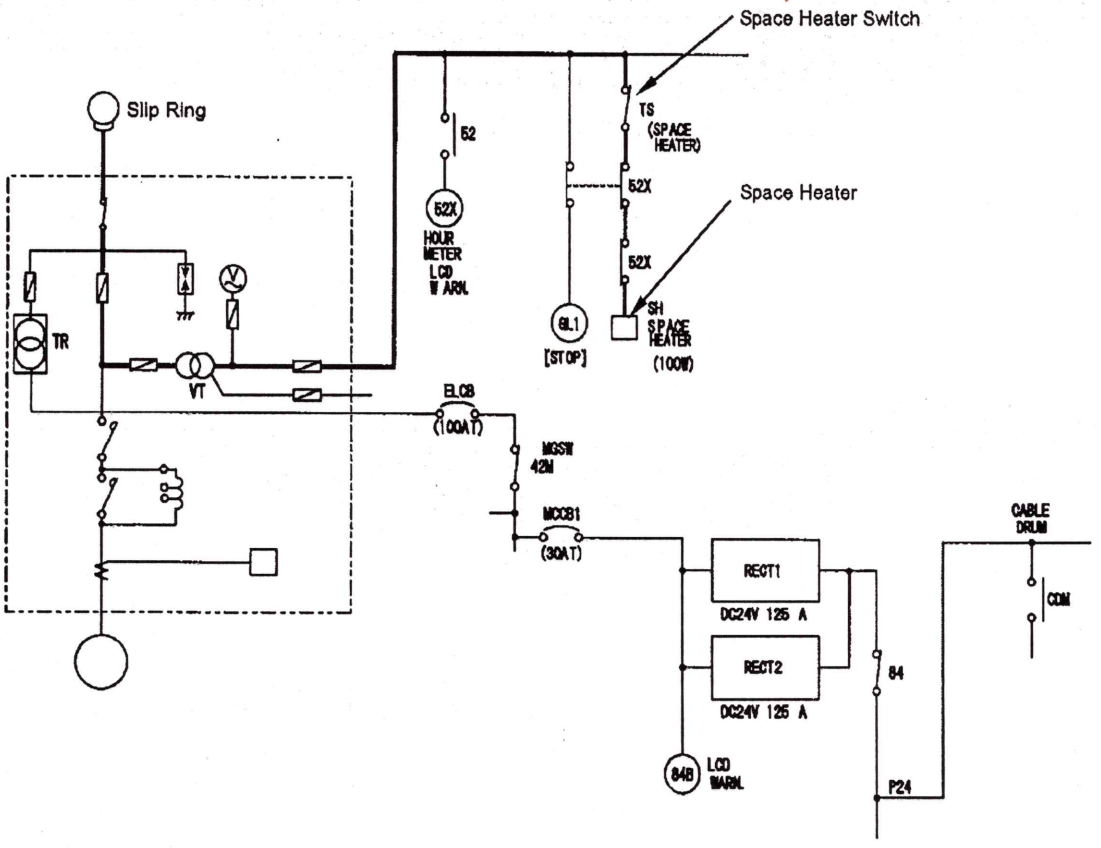

SYSTEM / Electric System (6600 V)

INTERLOCK CIRCUIT

The interlock circuit stops the main motor when detecting a failure in the circuit.
When the following failure occurs, the main motor is stopped.

- In case the power voltage (6600 V) is reduced to 4200 V or lower.
- In case the door of the high-voltage panel is opened.
- In case the main motor overheats.
- In case an open-phase, reversed-phase or over current occurs in the three-phase power source.
- In case reactor ST.X is faulty.
- In case the emergency switch is set to the emergency stop position.
- In case the valve limit switch is OFF (the butterfly valve is closed).

Tata Hitachi Construction Machinery Co. Pvt. Ltd.

SYSTEM / Electric System (6600 V)

In Case Power Voltage (6600 V) Is Reduced to 4200 V or Lower

1. When the power voltage is over 4200 V, coil 27 in the low-voltage detection relay is operated. Contact 27 in the trip coil circuit is kept opened.
2. When the power voltage becomes 4200 V or less and voltage which is supplied from transformer VT to coil 27 in the low-voltage detection relay becomes 85 V or less, coil 27 is not excited. Contact 27 in the trip coil circuit and contact 27 in the controller output circuit are closed.
3. Current from transformer VT flows to trip coil 52 through contact 27 in the trip coil circuit.
4. When trip coil 52 is excited, main contact 52 is opened. Current to the main motor is blocked.
5. Therefore, the main motor stops.
   The main motor cannot start until the power voltage returns to 5200 V or more.
6. Current from transformer TR flows to terminal 76-7 of MC through converters (RECT1, RECT2), and contact 27 in the controller output circuit.
7. MC sends the signal of low power voltage to IDU.

Tata Hitachi Construction Machinery Co. Pvt. Ltd.

SYSTEM / Electric System (6600 V)

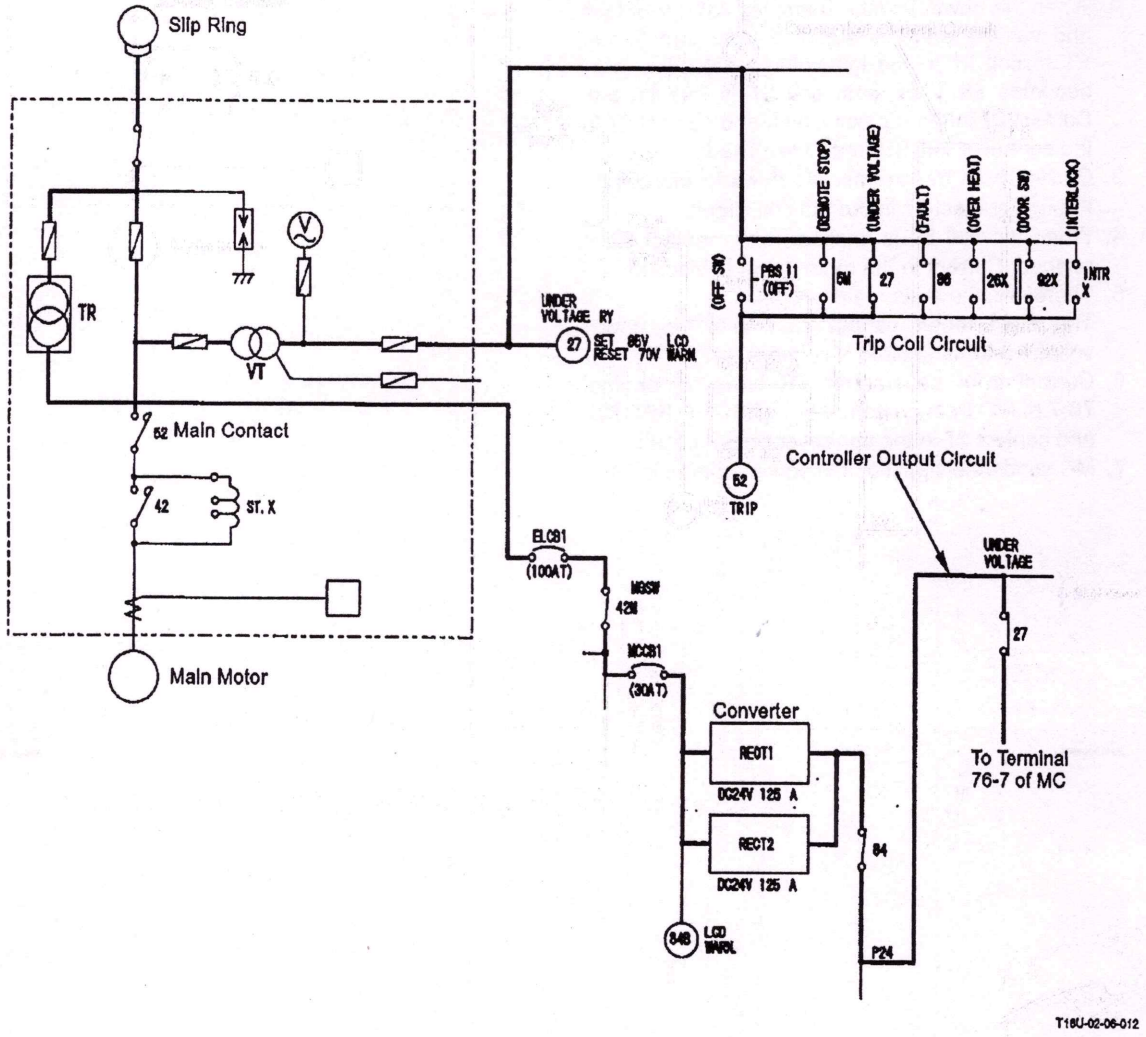

Tata Hitachi Construction Machinery Co. Pvt. Ltd.

SYSTEM / Electric System (6600 V)

In Case Door of High-Voltage Panel Is Opened

IMPORTANT: When the door of the high-voltage panel is opened, the main motor stops. Even if the main motor start switch is pushed, the main motor does not restart.

1. When opening the door, door switch 2 (92X) is closed and door switch 1 (X3) is opened.
2. As door switch 2 (92X) is closed, current from transformer VT flows to trip coil 52 through contact 92X in the trip coil 52 circuit.
3. When trip coil 52 is excited, main contact 52 is opened. Current to the main motor is blocked.
4. Therefore, the main motor stops.
5. As door switch 1 (X3) is opened, current which flows from transformer TR to coil 92X through door switch 1 (X3) is blocked.
6. When coil 92X is stopped exciting, contacts 92X in the contact coil circuit, the controller output circuit, and the battery circuit are opened.
7. As contact 92X in the contact coil circuit is opened and current to contact coil 52 is blocked, the main motor does not start.
8. As contact 92X in the controller output circuit is opened, current which flow from converters (RECT1, RECT2) to terminal 76-10 of MC are blocked.
   Therefore, MC sends the signal of the door opening to IDU.
9. As contact 92X in the battery circuit is opened, current which flows from transformer TR to coil 92D is blocked. Then, coil 92D is stopped exciting and contact 92D in the battery relay circuit is opened.
10. As contact 92D is opened, current which flows from the battery relay to coil 42M is blocked. Then, coil 42M is stopped exciting and contact 42M is opened.
11. Therefore, the electric power supply is stopped to the cab heater and each part of the machine.

Tata Hitachi Construction Machinery Co. Pvt. Ltd.

SYSTEM / Electric System (6600 V)

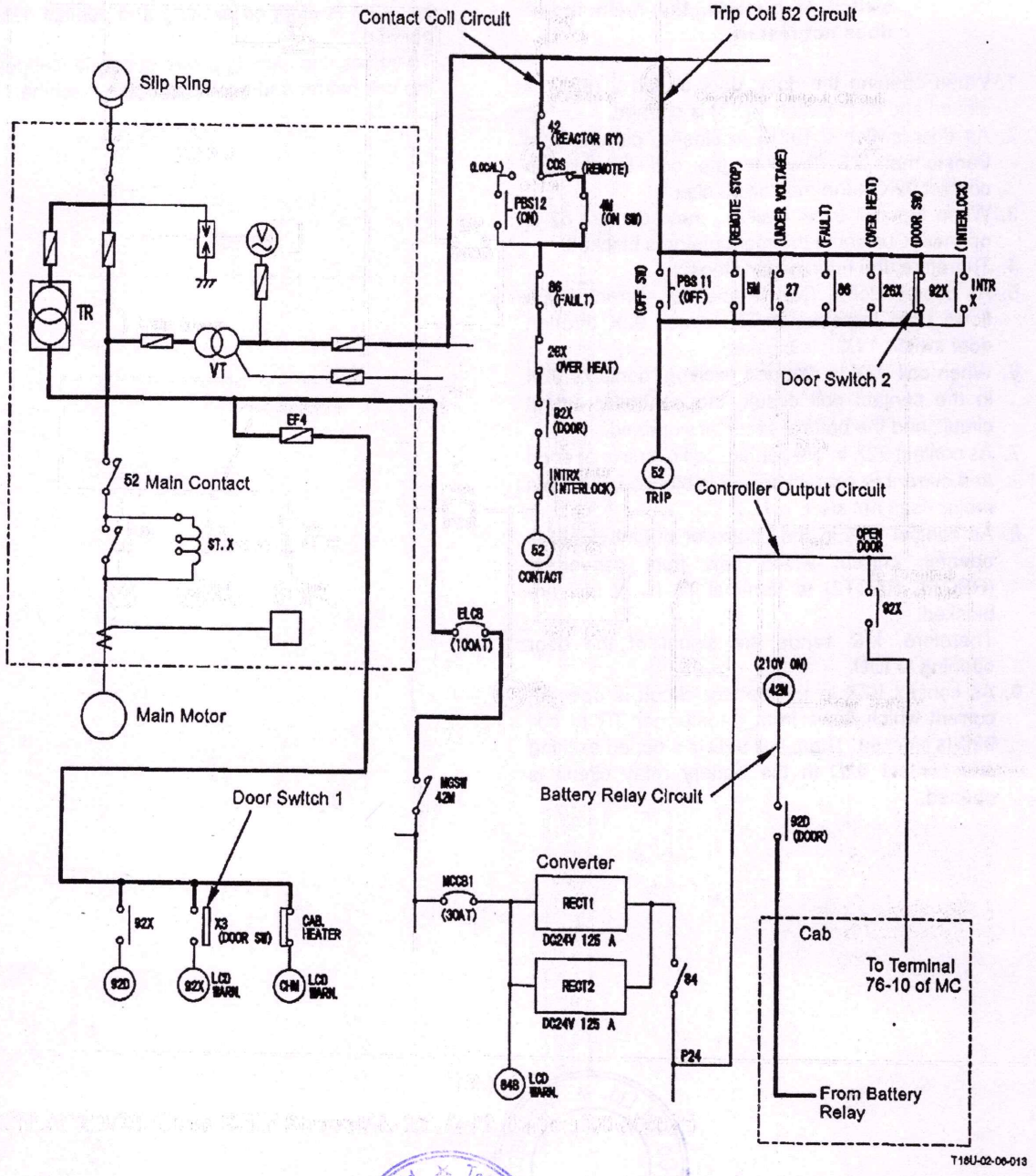

Tata Hitachi Construction Machinery Co. Pvt. Ltd.

SYSTEM / Electric System (6600 V)

In Case Main Motor Overheats

IMPORTANT: When the main motor overheats due to any troubles, the main motor stops and the alarm is displayed on the monitor display.
Even if the main motor has returned from overheating, the reset switch should be pushed in order to restart.

1. When the main motor temperature is 140°C or more, overheat detector 26 is operated.
2. When contact 26 in the overheat detection circuit is closed, current from transformer VT flows to coil 26X and indicator OL2 through contact 26 and contact 52X.
3. Coil 26X is excited. At the same time, indicator OL2 lights.
4. As coil 26X is excited, contacts 26X in the trip coil circuit and the overheat detection circuit are closed. Contacts 26X in the contact coil circuit and the controller output circuit are opened.
5. Current from transformer VT flows to trip coil 52 through contact 26X in the trip coil 52 circuit.
6. When trip coil 52 is excited, main contact 52 is opened. The main motor stops.
7. As contact 26X in the controller output circuit is opened, current which flow from converters (RECT1, RECT2) to terminal 76-21 of MC are blocked.
8. Therefore, MC sends the overheating signal of the main motor to IDU.
9. As contact 26X in the contact coil circuit is opened and current to contact coil 52 is blocked, the main motor does not start.
10. Even if the main motor temperature is 140°C or less and contact 26 in the overheat detection circuit is opened, current is kept flowing to coil 26X and indicator OL2 through contact 26X and the reset switch.
11. When pushing the reset switch, current to coil 26X is blocked. Coil 26X is stopped exciting.
12. Contacts 26X in the contact coil circuit and the controller output circuit are closed. Contacts 26X in the trip coil circuit and the overheat detection circuit are opened.
    Therefore, when pushing the main motor start switch, the main motor restarts.

Machinery Co. Pvt. Ltd. Tata Hitachi Construction

SYSTEM / Electric System (6600 V)

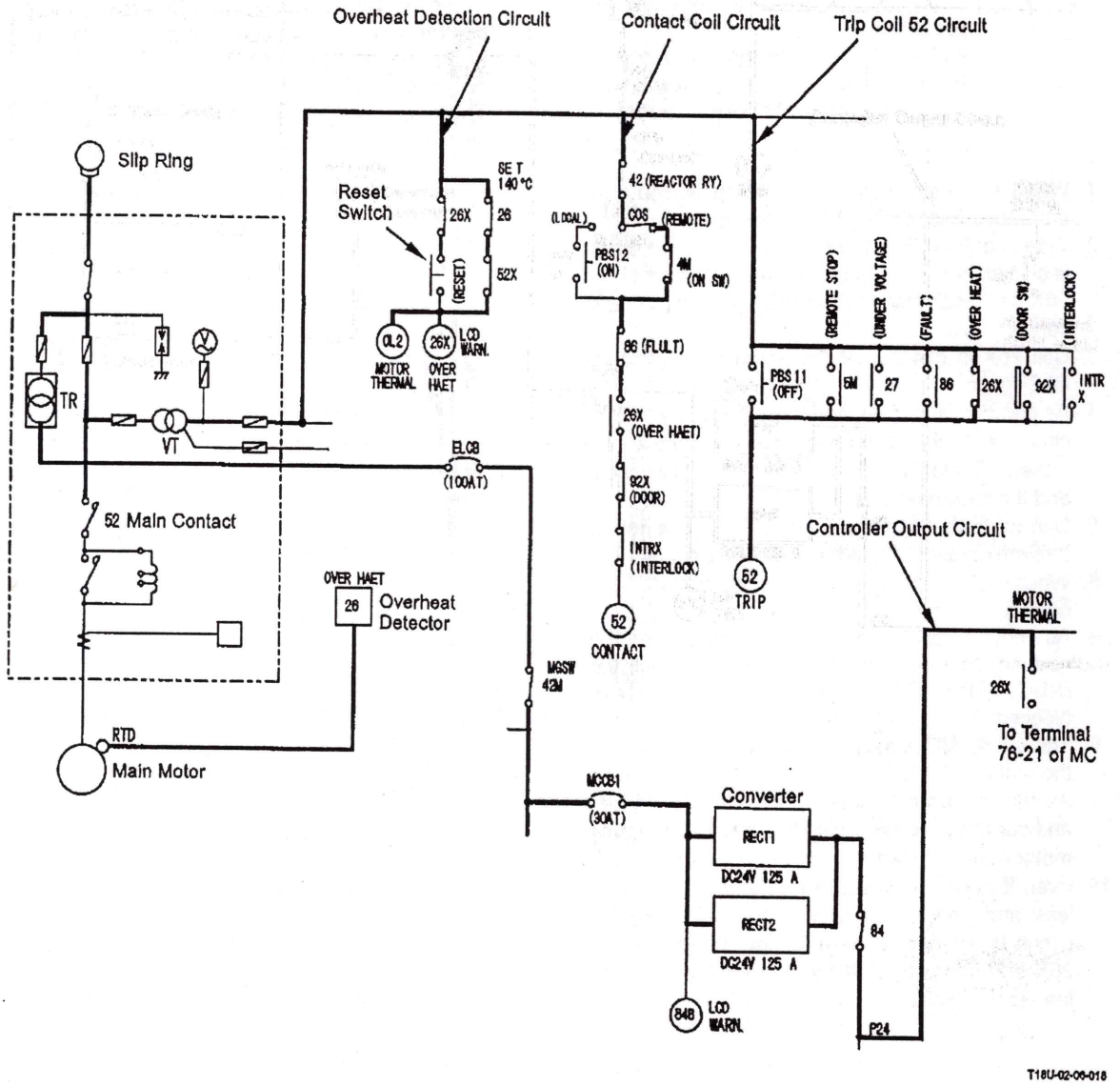

SYSTEM / Electric System (6600 V)

In Case Open-Phase, Reversed-Phase, or Overcurrent Occurs in Three-Phase Power Source

IMPORTANT: When an open-phase, reversed-phase, or overcurrent occurs in the three-phase power source, the main motor stops and the alarm is displayed on the monitor display.
Even if the main motor has returned to normal condition, the reset switch should be pushed in order to restart.

- **Open-Phase:**
  When the imbalance of each phase is detected and the imbalance status is kept for five seconds or more, 3E relay is operated.
- **Reversed-Phase:**
  When the inverted order of R, S, and T is detected, 3E relay is operated within 0.5 second.
- **Overcurrent:**
  In case current (200 A or more) is kept for five seconds or more, 3E relay is operated.

- Stop of Main Motor
  1. When 3E relay 46 detects any of open-phase, reversed-phase or overcurrent, contact 46 is closed. When contact 46 is closed, current from transformer VT flows to coil 46X.
  2. Coil 46X is excited and contact 46X in the main motor troubleshooting circuit is closed. Contact 46X in the controller output circuit is opened.
  3. Current from transformer VT flows to coil 86 and indicator OL1 in the main motor troubleshooting circuit.
  4. Coil 86 is excited. At the same time, indicator OL1 lights.
  5. As coil 86 is excited, contact 86 in the contact coil circuit is opened. Contact 86 in the trip coil circuit is closed.
  6. Current from transformer VT flows to trip coil 52 through contact 86 in the trip coil circuit.
  7. When trip coil 52 is excited, main contact 52 is opened. The main motor stops.
  8. As contact 46X in the controller output circuit is opened, current which flow from converters (RECT1, RECT2) to terminal 76-3 of MC are blocked.
  9. Therefore, MC sends the 3E relay abnormal signal of the main motor to IDU.
  10. As contact 86 in the contact coil circuit is opened and current to contact coil 52 is blocked, the main motor does not start.

- Restart of Main Motor
  1. Contact 46 in the main motor troubleshooting circuit is a manually reset type switch. Therefore, contact 46 is kept closed and coil 46X is kept excited even if the faulty part is recovered. In addition, current is kept flowing to coil 86 through contact 86 and the reset switch.
  2. When opening contact 46 manually, current to coil 46X is blocked. Coil 46X is stopped exciting.
  3. Contact 46X in the controller output circuit is closed. Contact 46X in the main motor troubleshooting circuit is opened.
  4. When pushing the reset switch, current to coil 86 is blocked. Coil 86 is stopped exciting.
  5. Contact 86 in the contact coil circuit is closed. Contact 86 in the trip coil circuit is opened. Therefore, when pushing the main motor start switch, the main motor restarts.

Tata Hitachi Construction Machinery Co. Pvt. Ltd.

SYSTEM / Electric System (6600 V)

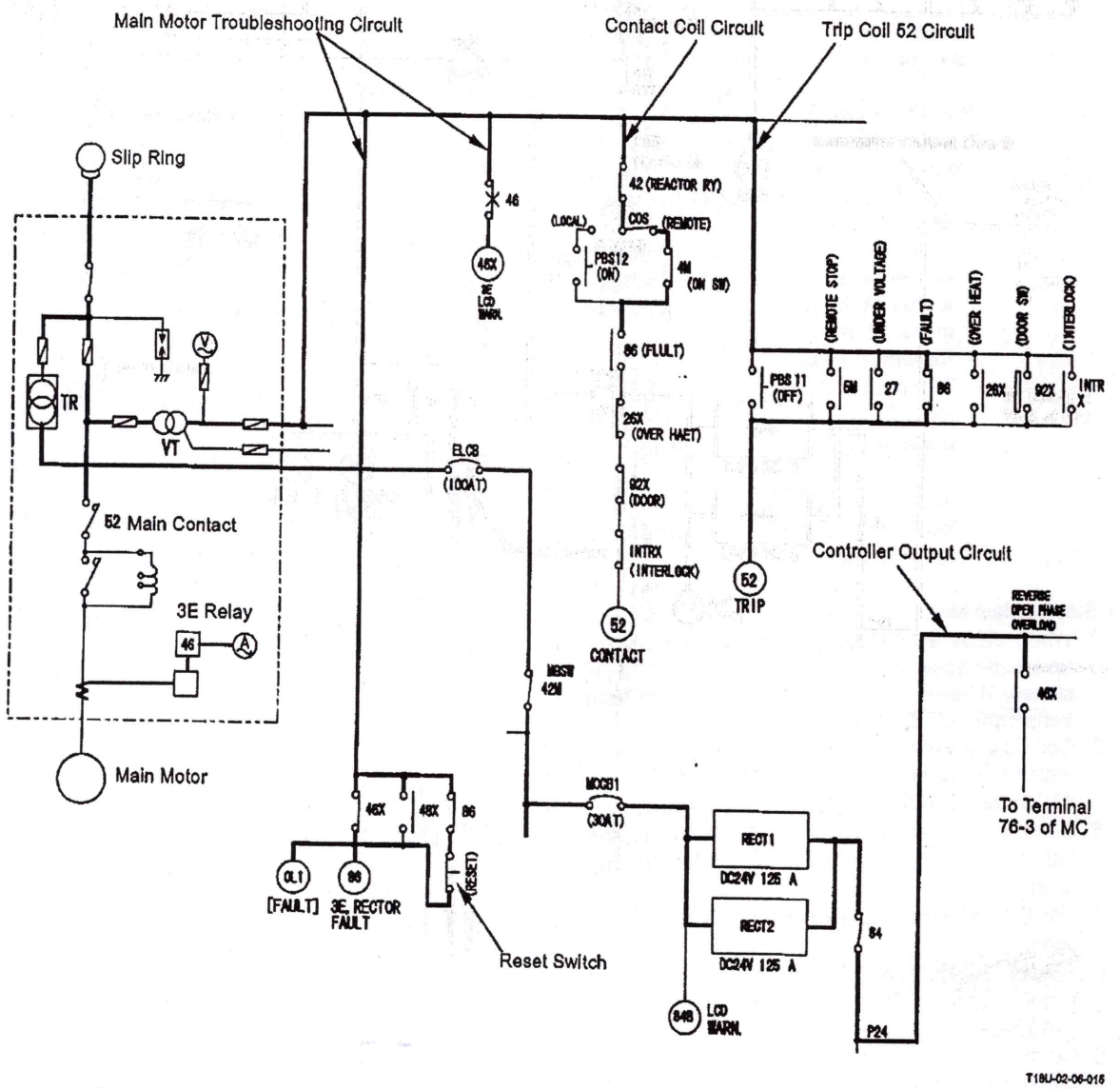

Tata Hitachi Construction Machinery Co. Pvt. Ltd.

SYSTEM / Electric System (6600 V)

In Case Reactor ST.X Is Faulty

NOTE: Faulty reactor ST.X is in the status that main contact is operated, and reactor ST.X is not operated when pushing the main motor start switch.
In this case, the main motor stop and cannot restart.

NOTE: When reactor ST.X is faulty, the main motor stops and the alarm is displayed on the monitor display.
Even if the main motor has returned to normal condition, the reset switch should be pushed in order to restart.

1. When pushing the main motor start switch, contact 52 in the main motor start control circuit is closed. Then, contact 42X in the contact coil 42 circuit is closed in five seconds. Current flows to contact coil 42. Contact coil 42 is excited.
(Refer to Start of Main Motor.)
2. In case contact 42 in reactor ST.X is closed, contact 42 in the start timer relay circuit is opened. In case contact 42 in reactor ST.X is not closed, contact 42 in the start timer relay circuit is kept closed.
3. Current from transformer VT flows to timer coil 48 through contact 52 in the main motor start control circuit and contact 42 in the start timer relay circuit.
4. Therefore, timer coil 48 is excited. In case the exciting status is kept for ten seconds or more, contact 48 in the reactor warning circuit is closed. Then, current from transformer VT flows to coil 48X through contact 48.
5. Coil 48X is excited and contact 48X in the main motor troubleshooting circuit is closed. Contact 48X in the controller output circuit is opened.
6. Current from transformer VT flows to coil 86 and indicator OL1 in the main motor troubleshooting circuit.
Then, coil 86 is excited. At the same time, indicator OL1 lights.
7. As coil 86 is excited, contact 86 in the contact coil 52 circuit is opened. Contact 86 in the trip coil 52 circuit is closed.
Then, current from transformer VT flows to trip coil 52 through contact 86.
8. When trip coil 52 is excited, main contact 52 is opened. The main motor stops.
9. As contact 48X in the controller output circuit is opened, current which flow from converters (RECT1, RECT2) to terminal 76-16 of MC are blocked.
10. Therefore, MC sends the reactor ST.X abnormal signal to IDU.
11. As contact 86 in the contact coil 52 circuit is opened and current to contact coil 52 is blocked, the main motor does not start.
12. Current through contact 86 and the reset switch besides contact 48X1 flows to coil 86 in the main motor troubleshooting circuit. Therefore, the reset switch should be pushed in order to start the main motor after recovering the faulty.
(Refer to In Case Open-Phase, Reversed-Phase, or Overcurrent Occurs in Three-Phase Power Source.)

SYSTEM / Electric System (6600 V)

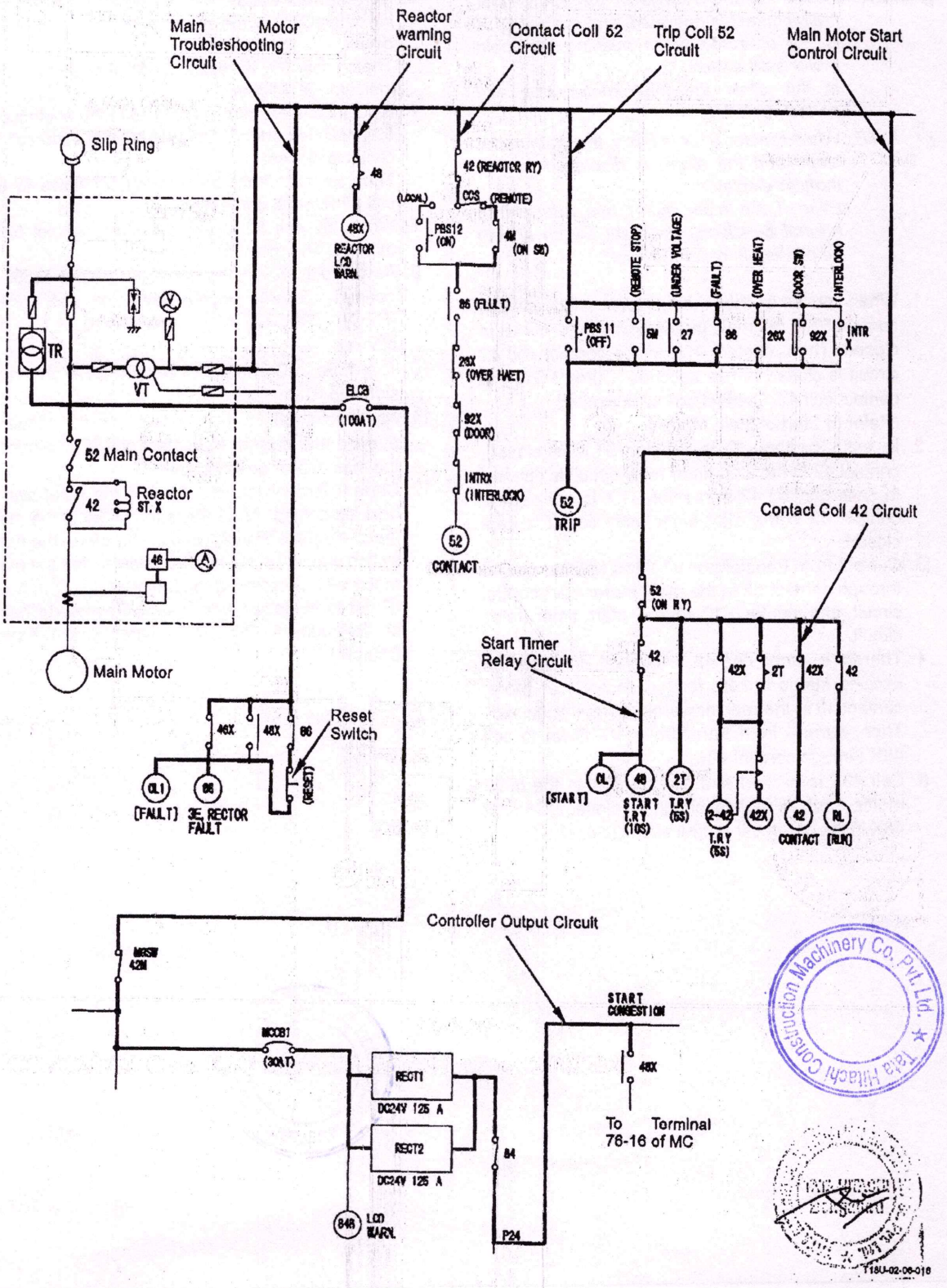

Tata Hitachi Construction Machinery Co. Pvt. Ltd.

SYSTEM / Electric System (6600 V)

In Case Emergency Switch Is Set to Emergency Stop Position
In Case Valve Limit Switch Is Turned OFF (Butterfly Valve Is Closed)

NOTE: When either of emergency switches from 1 to 6 is set to the emergency stop position, or when either of the valve limit switches (suction (left), suction (right), return (left), and return (right)) is turned OFF, the main motor stops. Even if the main motor start switch is pushed, the main motor does not restart.

1. When either of emergency switches from 1 to 6 is set to the emergency stop position or when either of the valve limit switches is turned OFF, switch INTERLOCK is opened.
   Then, current from transformers (RECT1, RECT2) are blocked. Coil INTRX is stopped exciting.
2. As coil INTRX is stopped exciting, contact INTRX in the trip coil 52 circuit is closed. At the same time, contact INTRX in the contact coil 52 circuit is opened.
3. Current from transformer VT flows to trip coil 52 through contact INTRX in the trip coil 52 circuit.
4. As trip coil 52 is excited, main contact 52 is opened and current to the main motor is blocked. The main motor stops.
5. As contact INTRX in the contact coil 52 circuit is opened, and current to contact coil 52 is blocked, the main motor does not start.

Tata Hitachi Construction Machinery Co. Pvt. Ltd.

SYSTEM / Electric System (6600 V)

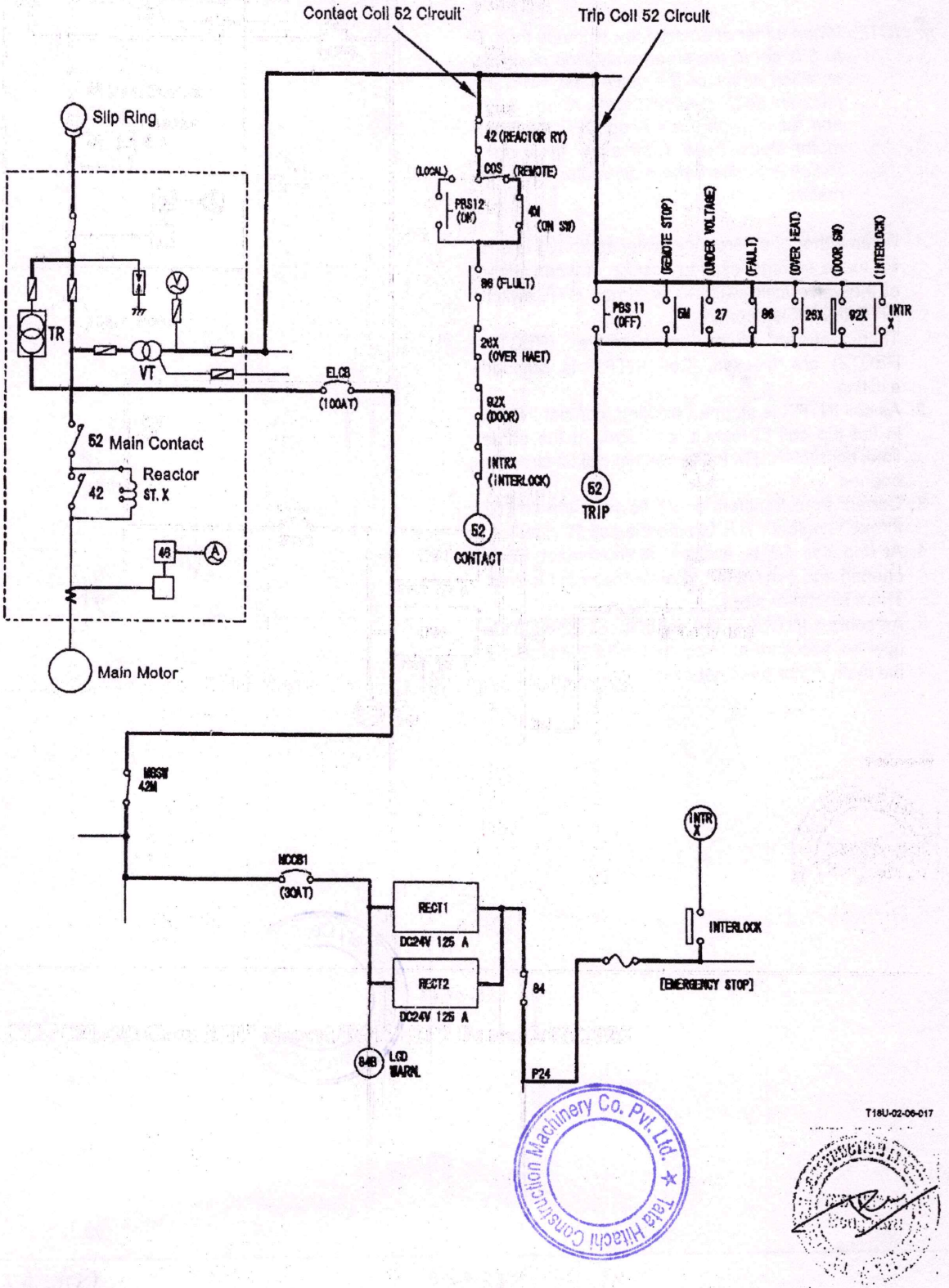

Tata Hitachi Construction Machinery Co. Pvt. Ltd.

Tender Number: CIL/C2D/20 Cum EHF Shovel/R-151/394 Date: 02.11.2023

As per Part D Equipment Specification Clause No D.10.2 Technical Details (e)

Calculation for determining the time for operating cycle.

i. Load the bucket to rated capacity over the maximum working range, swing through an angle of 90 degree, dump and return to dig.

EX3600E-6 LD

Operations	Time	Average
Fill Bucket	sec	16.00
Swing to dump (90°)	sec	7.00
Dump	sec	3.50
Return Swing (90°)	sec	7.50
Total cycle (90°)	sec	**34.00**

ii. Hourly power consumption for the above operating cycle

Load Condition	65% load factor 85% power factor
Electricity consumption, Real Power (kWh)	821 kwh

Tata Hitachi Construction Machinery Co. Pvt. Ltd.

DETAILED TECHINCAL DESCRIPTION OF HITACHI EX3600E-6 HYDRAULIC EXCAVATOR - As per Clause No D.10.2 Technical Details (f)

Hitachi EX3600E-6 hydraulic excavator is equipped with High Voltage, Three Phase, Squirrel Cage Induction Motor HITACHI TFOA-KK type having rated continuous output 1200 kW and Voltage AC 6000 - 6600 V / 50 Hz.

Shovel-type undercarriage dual-flanged-type bolt linkage for side frame and X-form center frame assures durability. Heavy-duty track frame of all-welded, stress-relieved structure. Top-grade materials used for toughness. Lifetime-lubricated induction-hardened track rollers, idlers and drive tumblers with floating seals. Specially heat-treated connection pins. Hydraulic track adjuster provided with N2 gas accumulator and relief valve. Track adjuster provided with protection device against abnormal tension. Travel motion alarm device.

ELECTRIC MOTOR

Type - HITACHI TFOA-KK Rating
Rated continuous output - 1200 kW
Voltage AC 6000 - 6600 V / 50 Hz
AC 6600 - 6900 V / 60 Hz
Number of poles - 4
Synchronous RPM - 1500 min-1 / 50 Hz
1800 min-1 / 60 Hz
Rated current - 124A @ 6600 V
Insulation class F class B raise

Hydraulic System

- OHS (Optimum Hydraulic System)
  8 main pumps and 4 valves system enable both independent and combined operations of all functions.
- Hydraulic drive cooling-fan system for oil cooler.
- Forced-lubrication and forced-cooling pump drive system

Main pumps - 8 variable-displacement axial piston pumps for front attachment, travel and swing
Max. oil flow - 8 x 500 L/min
Pilot pump - 1 gear pump
Max. oil flow - 110 L/min

Relief Valve Settings

Implement Circuit- 29.4 MPa (300 kgf/cm2)
Swing Circuit- 29.4 MPa (300 kgf/cm2)
Travel Circuit- 29.4 MPa (300 kgf/cm2)
Pilot circuit- 3.9 MPa (40 kgf/cm2)

Tata Hitachi Construction Machinery Co. Pvt. Ltd.

Hydraulic Filters

All hydraulic circuits have high-quality hydraulic filters for protection against oil contamination and longer life of hydraulic components.

	Qty	
Fuel Flow Filter	5	10 µm
High pressure strainer	8	120 µm
Drain Filter	1	10 µm
By-pass filter	1	5 µm
Pilot filter	1	10 µm

Hydraulic Cylinders

High-strength piston rods and tubes. Cylinder cushion mechanisms are provided for boom, arm, bucket and dump cylinders. Bucket cylinders of loading shovel are provided with protector.

Shovel

	Qty	Bore	Rod Diameter
Boom	2	360 mm	260 mm
Arm	1	300 mm	220 mm
Bucket	2	280 mm	200 mm
Dump	2	225 mm	130 mm
Level	1	360 mm	260 mm

Controls

2 Implement Levers

Electric joystick control levers. Right lever is for boom and bucket control, left lever for swing and arm control. 2 pedals provided for opening/ closing the bottom dump bucket.

2 Travel Levers with pedals

Remote-controlled hydraulic servo system. Independent drive at each track allows counter rotation of tracks.

UPPERSTRUCTURE

Revolving Frame

A deep, full-reinforced box section. Heavy-gauge steel plates used for ruggedness

Deck Machinery

Maintenance accessibility is the major feature in the lay-out of deck machinery. Sidewalks provide easy access to electric motor, hydraulic and electrical components. ISO-met stairs and handrails. Sidewalks and stairs are provided with skid-resistant plates.

Swing speed- 2.9 rpm

Operator's Cab

The sturdy cab, with the top guard conforming to OPG Leve (ISO), helps protect the operator from falling objects. Independent, pressurized, 1 800 mm wide, 2 150 mm high, roomy 7.5 m3 cab with tinted-glass windows features all-round visibility. Air-suspension type, fully adjustable reclining seat with armrests; movable with or without front & swing control levers by slide. Instruments and control panel are within easy reach of the operator. 3 air conditioner system

Eye level height - 6760 mm

Undercarriage

Tracks

Shovel-type undercarriage. Dual-flanged-type bolt linkage for side frame and X-form center frame assures durability. Heavy-duty track frame of all-welded, stress-relieved structure. Top-grade materials used for toughness. Lifetime-lubricated induction-hardened track rollers, idlers and drive tumblers with floating seals. Specially heat-treated connection pins. Hydraulic track adjuster provided with N2 gas accumulator and relief valve. Track adjuster provided with protection device against abnormal tension. Travel motion alarm device.

Shovel-type Undercarriage

Triple grouser shoes of induction-hardened cast steel.

Shoe width -1270 mm

Number of Rollers and shoes (each side)

Upper Rollers-3
Lower Rollers- 8
Track Shoes- 38

Travel Device

Each track driven by high-torque, axial piston motors, allowing counterrotation of tracks. 2-stage planetary gear plus spur gears reduction device. Dual-support-type traction device. Parking brake of spring-set/hydraulic-released disc type. This parking brake is manually releasable.

Travel Speeds- Low: 0 to 1.6 Kmph

High: 0 to 2.1 Kmph

Tata Hitachi Construction Machinery Co. Pvt. Ltd.

12/08/25

As per Part D Equipment Specification Clause No D.10.2 Technical Details (g)

Layout drawings and detailed description of all hydraulic systems and components.

MAIN COMPONENT

Overall

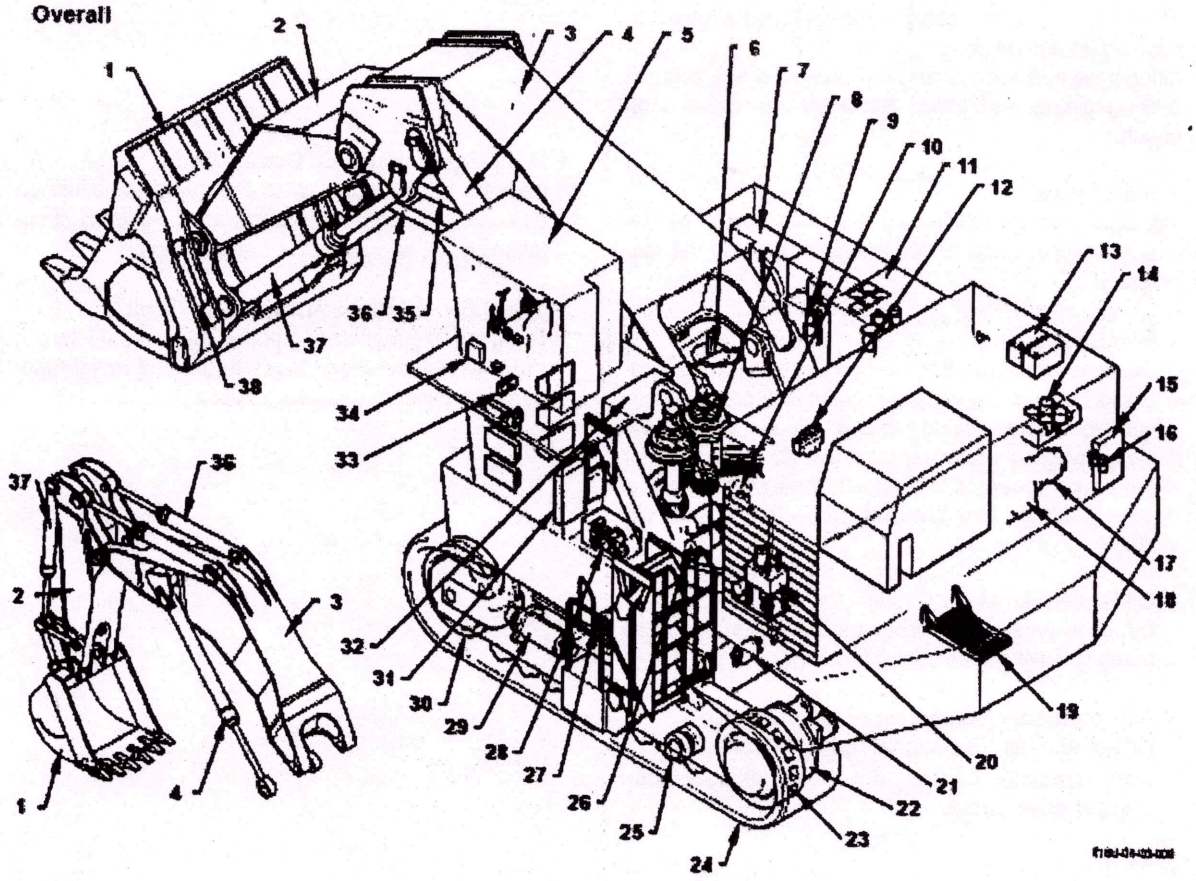

1 - Bucket
2 - Arm
3 - Boom
4 - Boom Cylinder (2 Used)
5 - Cab (Refer to T1-3-10.)
6 - Lubricator, Grease Tank (Refer to T1-3-29.)
7 - Oil Cooler (4 Used)
8 - Swing Device (4 Used) (Refer to T1-3-8.)
9 - Oil Cooler Fan Motor (2 Used)
10 - Center Joint
11 - Hydraulic Oil Tank
12 - Control Valve (4 Used) (Refer to T1-3-4.)
13 - Battery (2 Used)
14 - High-Pressure Strainer (8 Used)
15 - Relay Box (Refer to T1-3-18.)
16 - Pump Transmission Oil Filter (2 Used)
17 - Pump Device (Refer to T1-3-2, 16.)
18 - Main Motor (Refer to T1-3-2, 16.)
19 - Fast-Filling Device (Refer to T1-3-30.)
20 - Heater Unit
21 - Travel Brake Valve (4 Used)
22 - Travel Device (2 Used)
23 - Drive Tumbler (2 Used)
24 - Track (2 Used)
25 - Lower Roller (16 Used)
26 - Accumulator (2 Used) (For Adjuster)
27 - Upper Roller (8 Used)
28 - Air Conditioner Compressor Unit
29 - Adjuster Cylinder (2 Used)
30 - Front Idler (2 Used)
31 - Electrical Equipment Box (Refer to T1-3-14.)
32 - Cubicle
33 - Washer Tank
34 - Emergency Escape Unit
35 - Level Cylinder (Only LD)
36 - Arm Cylinder
37 - Bucket Cylinder (2 Used)
38 - Dump Cylinder (2 Used) (Only LD)

SYSTEM / Hydraulic System

OUTLINE

The hydraulic circuit consists of the main circuit, the pilot circuit, the oil cooler fan motor circuit, the air conditioner compressor circuit, the pump transmission oil cooling circuit and travel shock damper/travel stop circuit.

- Main Circuit
  Controls pressure oil from the main pumps by the control valves and drives the cylinders and the motors.

- Pilot Circuit
  Delivers pressure oil from the pilot pump to the operation control circuit, the travel mode selection circuit, the travel parking brake release circuit, the swing parking brake release circuit, the oil cooler fan motor speed control circuit, the fast-filling panel control circuit, and the auto-lubrication control circuit.

- Oil Cooler Fan Motor Circuit
  Supplies pressure oil from the oil cooler fan drive pump to drive the oil cooler fan motor.

- Air Conditioner Compressor Motor Circuit
  Drives the air conditioner compressor motor by using pressure oil from the air conditioner compressor drive pump.

- Pump Transmission Oil Cooling Circuit
  Delivers transmission oil to the pump transmission oil cooler by using the pump transmission oil circulation pump, and cools the transmission.

- Travel Shock Damper/Travel Stop Circuit
  Reduces external loads applied to the front idlers in order to reduce shock loads and stops travel function if an excessive load is applied.

Tata Hitachi Construction Machinery Co. Pvt. Ltd.

SYSTEM / Hydraulic System

MAIN CIRCUIT

Suction Circuit

For total of 8 main pumps (MP1 to 8), two main pumps are arranged in tandem. The suction manifold is connected to the hydraulic oil tank through the suction pipings. Each main pump draws hydraulic oil through the suction manifold.
6 suction filters are provided in the hydraulic oil tank.

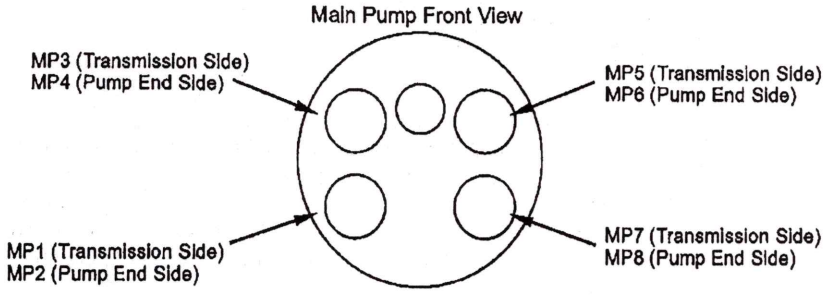

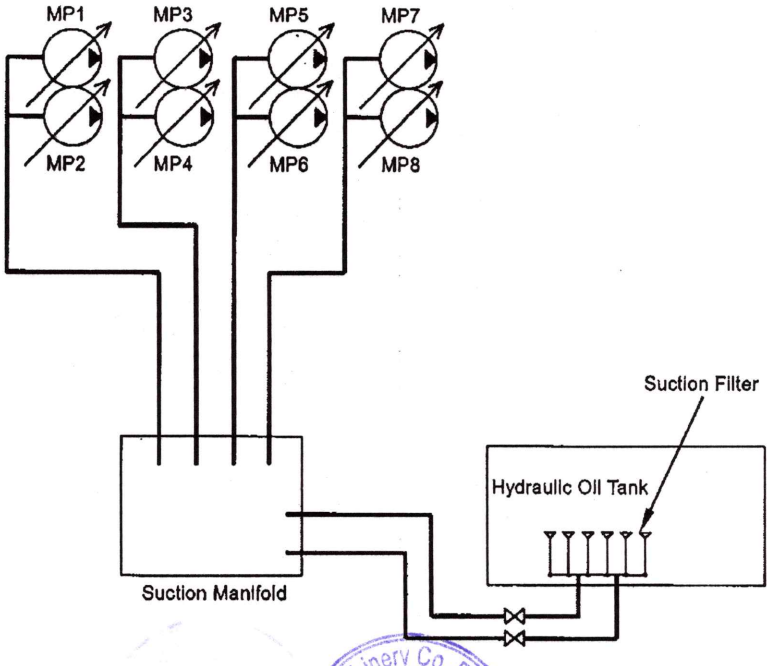

SYSTEM / Hydraulic System

(Blank)

SYSTEM / Hydraulic System

Delivery Circuit

Hydraulic oil from 8 main pumps in total is delivered to four control valves through the high-pressure strainer.
A check valve is provided in each circuit from each main pumps and prevents the main pump from being damaged when pressure oil flows in reverse.
Main pumps deliver hydraulic oil to control valves as follows:

- Control Valve 1 (Lower Left)
  Main Pumps 1 and 3
- Control Valve 2 (Upper Left)
  Main Pumps 2 and 4
- Control Valve 3 (Lower Right)
  Main Pumps 6 and 8
- Control Valve 4 (Upper Right)
  Main Pumps 5 and 7

Tata Hitachi Construction Machinery Co. Pvt. Ltd.

SYSTEM / Hydraulic System

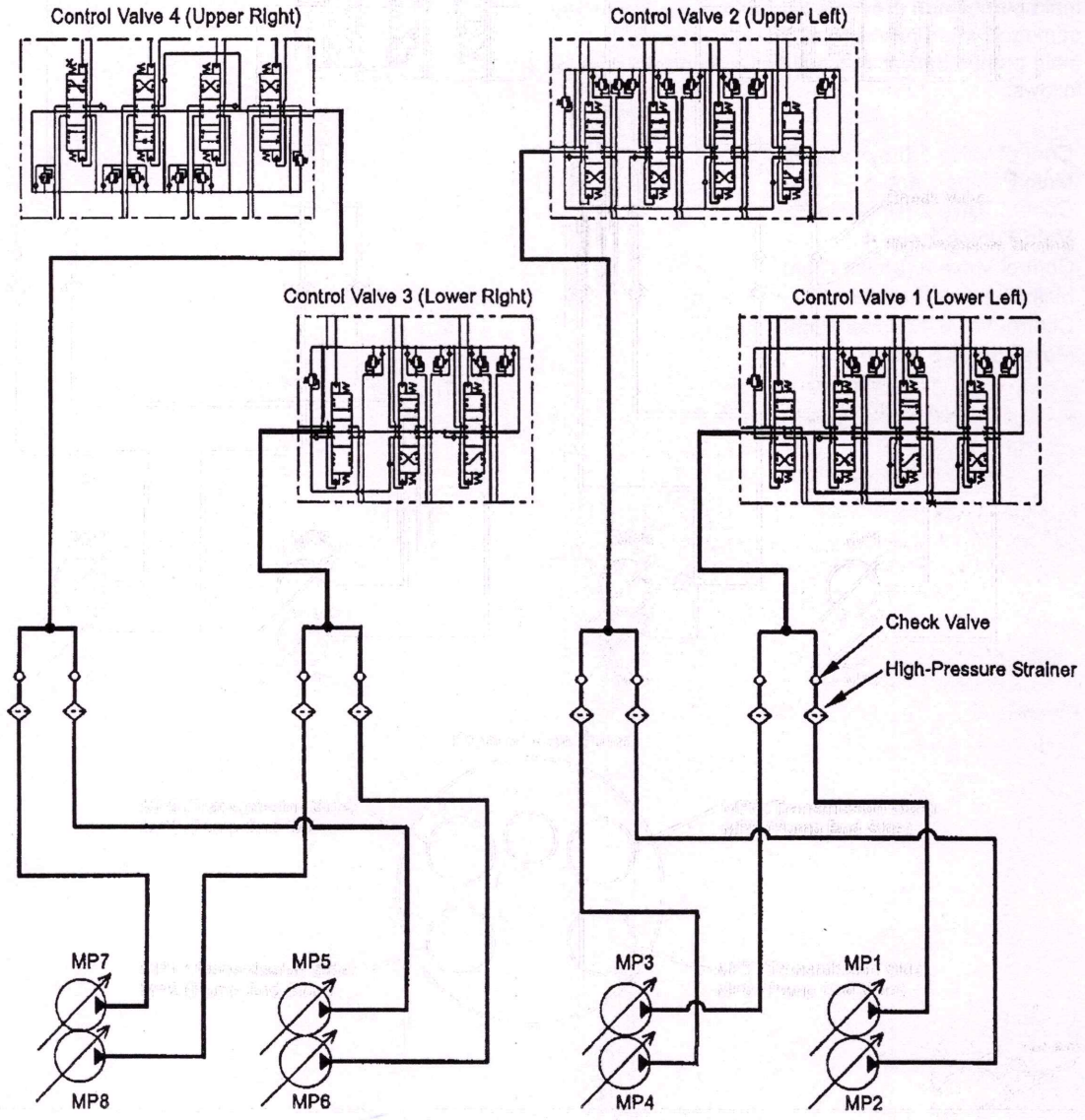

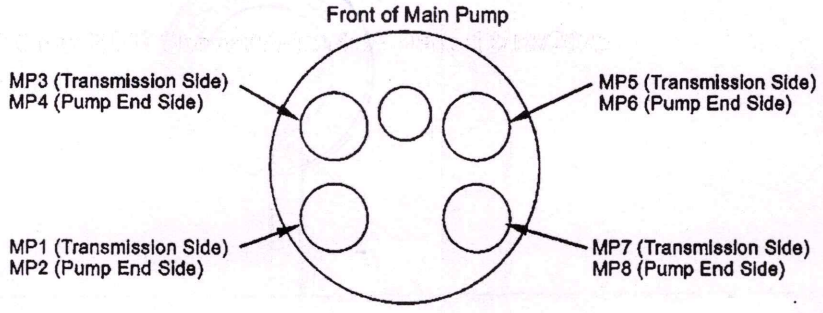

Construction Machinery Co. Pvt. Ltd. ★ Tata Hitachi

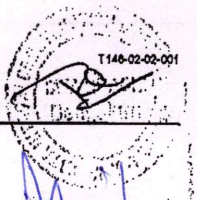

SYSTEM / Hydraulic System

Return Circuit

Returning oil from control valves 2 and 4 flows back to the hydraulic oil tank through the oil cooler and the full-flow filter.
When hydraulic oil temperature is low (with high viscosity), oil flow resistance in the oil cooler increases. Therefore, the low-pressure relief valve is opened so that hydraulic oil flows back to the hydraulic oil tank through the full-flow filter without through the oil cooler.
Returning oil from control valve 3 directly flows back to the hydraulic oil tank through the full-flow filter.

Returning oil from control valve 1 flows back to the hydraulic oil tank through the bypass filter, the two low-pressure relief valves, and the full-flow filter.

As returning oil from two oil cooler fan motors also flows to the return circuit from control valve 1, more oil flows than other return circuits. Therefore, two low-pressure relief valves are provided in this circuit.

In addition, the return circuit from control valve 1 is connected to the swing motor make-up circuit. The oil pressure in the return circuit is maintained to 0.24 MPa (2.5 kgf/cm^2, 36 psi) by the low-pressure relief valve in the circuit. Therefore, if hydraulic oil in the swing motor is not sufficiently supplied, the make-up valves are opened easily.
(Refer to COMPONENT OPERATION / Swing Device.)

SYSTEM / Hydraulic System

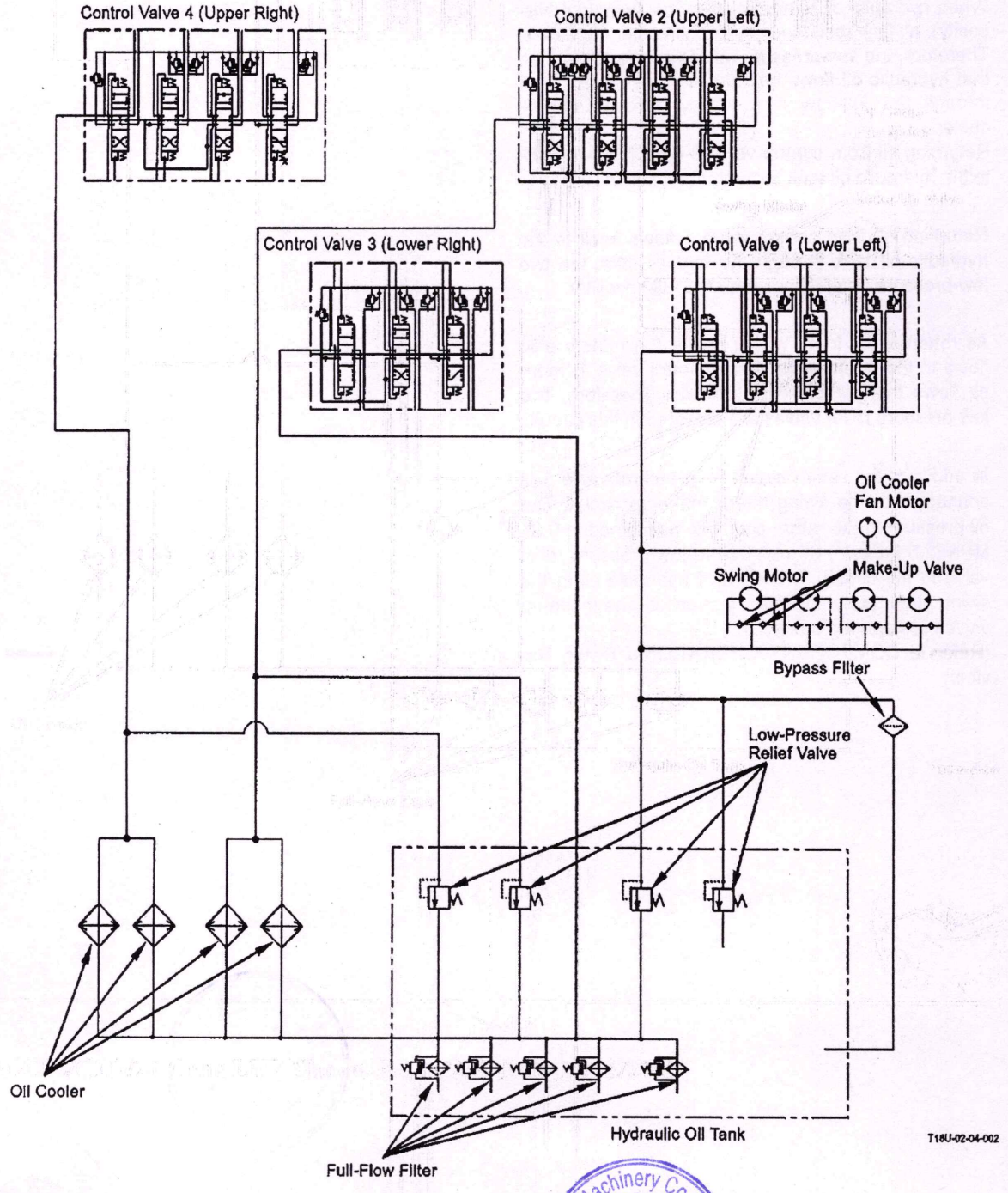

Tata Hitachi Construction Machinery Co. Pvt. Ltd.

SYSTEM / Hydraulic System

Single Operation Circuit

- When the boom is raised, all control valves are used and deliver pressure oil to two boom cylinders. When the boom is lowered, control valve 2 and 3 are not used and do not deliver pressure oil.
- When the arm (BH) is rolled in, all control valves are used and deliver pressure oil to the arm cylinder. When the arm (BH) is rolled out, control valves 1 and 2 are used.
  When the arm (LD) is extended, control valves 1, 2, and 3 are used and deliver pressure oil to the arm cylinder. When the arm (LD) is retracted, control valves 1 and 2 are used.
- When the bucket is rolled in (or tilted in), all control valves are used and deliver pressure oil to the two bucket cylinders. When the bucket is rolled out (or tilted out), control valves 2 and 4 are used.
- When the bucket (only LD) is opened/closed, control valve 2 is used and delivers pressure oil to the two bucket dump cylinders.
- When the upperstructure swings, control valve 3 is used and delivers pressure oil to four swing motors.
- When the machine travels, control valve 1 delivers pressure oil to two travel motors (left) and control valve 4 delivers pressure oil to two travel motors (right).

NOTE: LD: Loading Shovel
BH: Backhoe

SYSTEM / Hydraulic System

NOTE: LD: Loading Shovel
BH: Backhoe

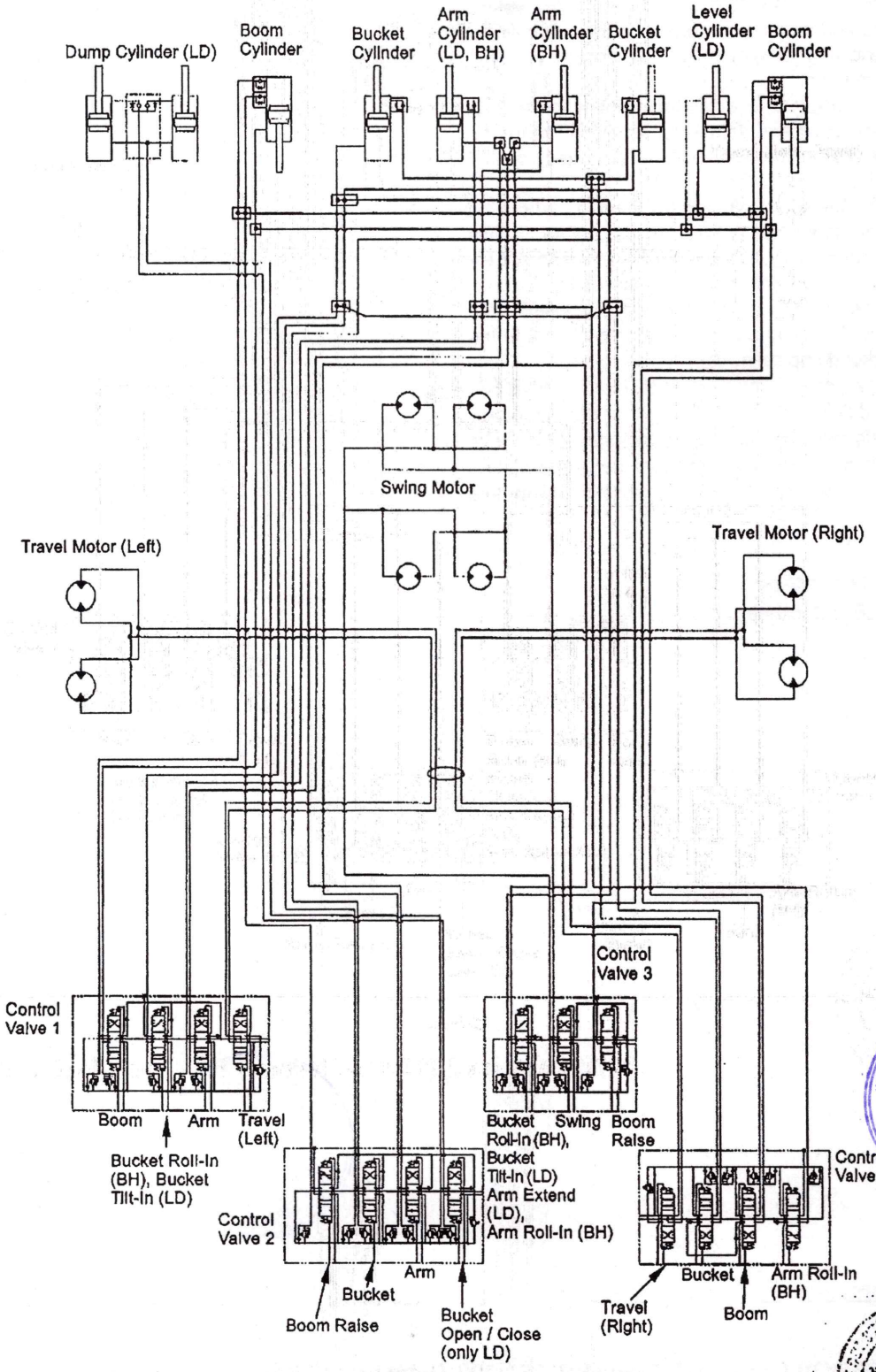

SYSTEM / Hydraulic System

Combined Operation Circuit

- When the travel and front attachment functions are operated simultaneously, control valve 1 delivers pressure oil to the travel motors (left). Control valve 4 delivers pressure oil to the travel motors (right).

The travel spools in the two control valves are at the farthest upstream side in the circuit during travel operation. No parallel circuit where pressure oil flows to the downstream side is provided. Therefore, control valves 2 and 3 are used when operating the front attachment and swing functions .

Tata Hitachi Construction Machinery Co. Pvt. Ltd.

SYSTEM / Hydraulic System

NOTE: LD: Loading Shovel
BH: Backhoe

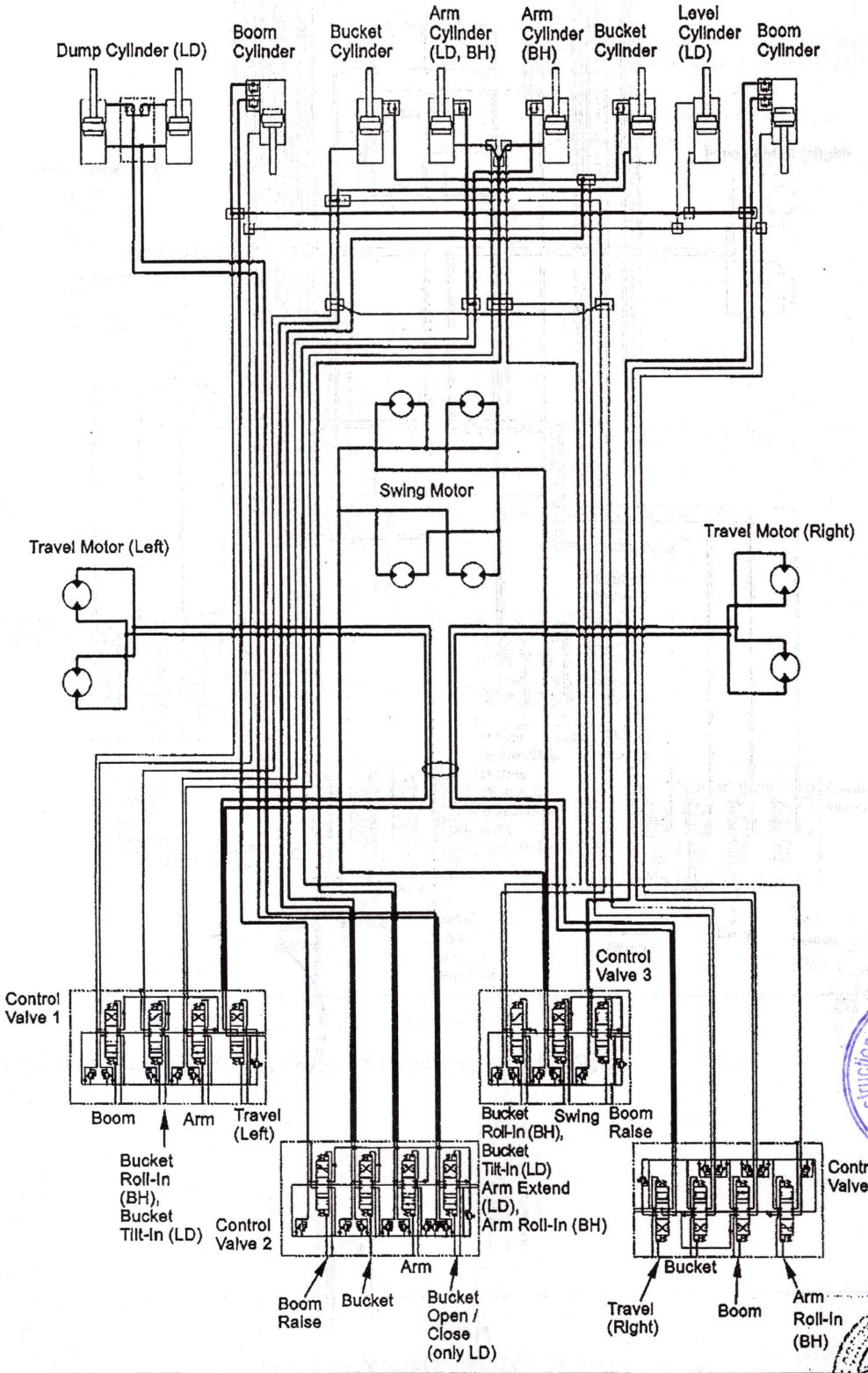

SYSTEM / Hydraulic System

- Arm Extend (LD) (Arm Roll-In (BH)) Single Operation
  When arm extend (LD) (arm roll-in (BH)) operation is made, the arm extend (arm roll-in) pilot pressure shifts the arm spools in all control valves and the arm priority selector valve. (The arm spool is not provided in control valve 4 (LD).)

- Combined Operation of Arm Extend (LD) (or Arm Roll-In (BH)) and Bucket Tilt-In (LD) (or Bucket Roll-In (BH))
  When combined operation of arm extend (LD) (or arm roll-in (BH)) and bucket tilt-in (LD) (or bucket roll-in (BH)) is made, the arm extend (arm roll-in) pilot pressure shifts the arm priority selector valve so that the bucket tilt-in (or bucket roll-in) pilot pressure is not routed to control valve 3. Therefore, the spool in control valve 3 is shifted to the arm extend (arm roll-in) side, So That, the arm extend (arm roll-in) is operated prior to bucket tilt-in (or bucket roll-in).

NOTE: LD: Loading Shovel
BH: Backhoe

SYSTEM / Hydraulic System

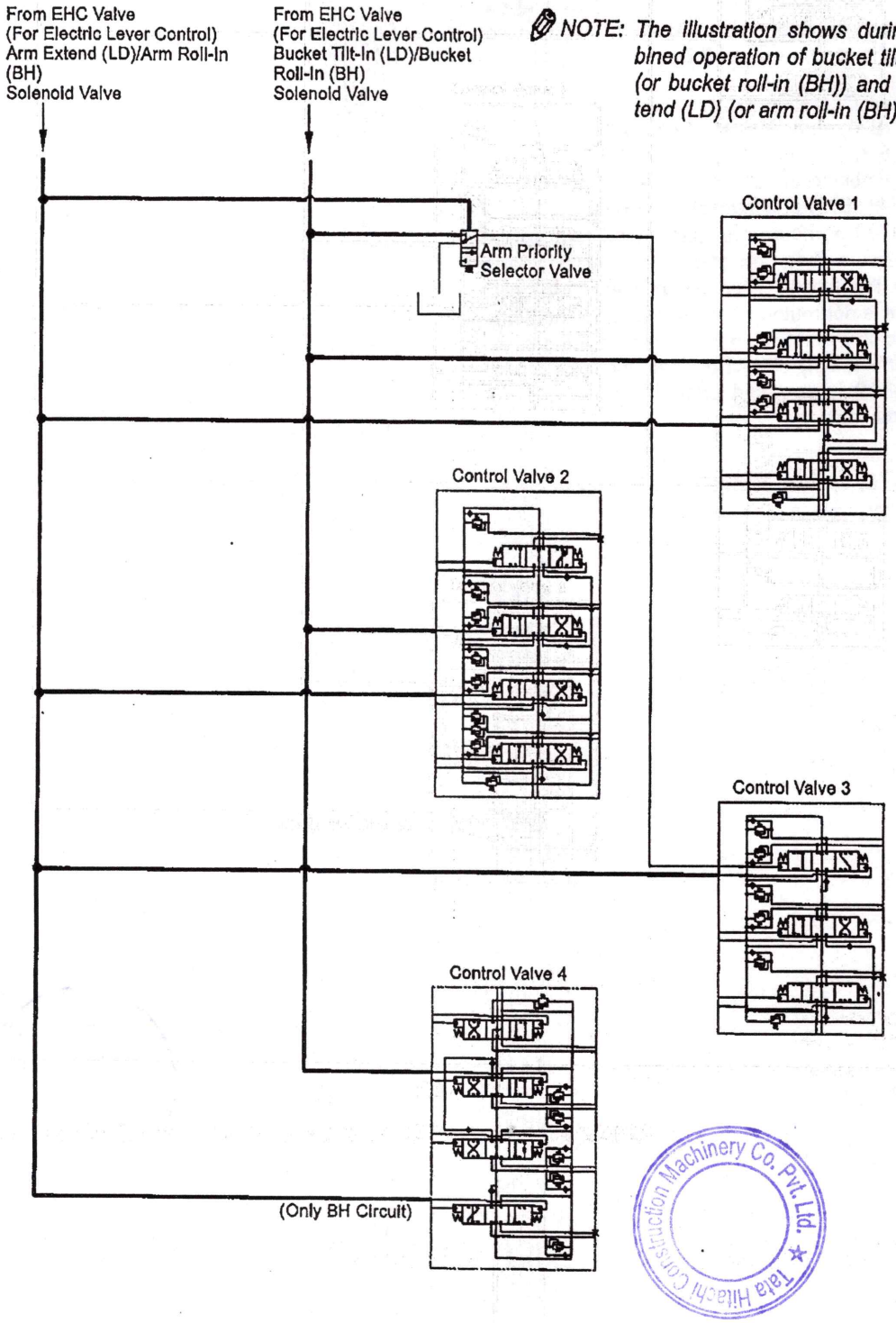

PILOT CIRCUIT

Pressure oil from pilot pumps of the engines is used for the following circuits:

- Operation Control Circuit
- Oil Cooler Fan Motor Control Circuits (Refer to SYSTEM/Control System.)
- Travel Mode Selection Circuit (Refer to SYSTEM/Control System and COMPONENT OPERATION/Travel Device.)
- Travel Parking Brake Release Circuit (Refer to COMPONENT OPERATION/Travel Device.)
- Swing Parking Brake Release Circuit (Refer to COMPONENT OPERATION/Swing Device.)
- Fast-Filling Panel Control Circuit (Refer to SYSTEM/Control System.)
- Auto-Lubrication Control Circuit (Refer to SYSTEM/Control System.)

Three accumulators are provided in the pilot circuit and delivers hydraulic oil to the pilot circuit for a while after the engine stops. The pilot pressure in the pilot circuit is constantly maintained to the set pressure of 3.9 MPa (40 kgf/cm^2, 568 psi) by the pilot relief valve.

SYSTEM / Hydraulic System

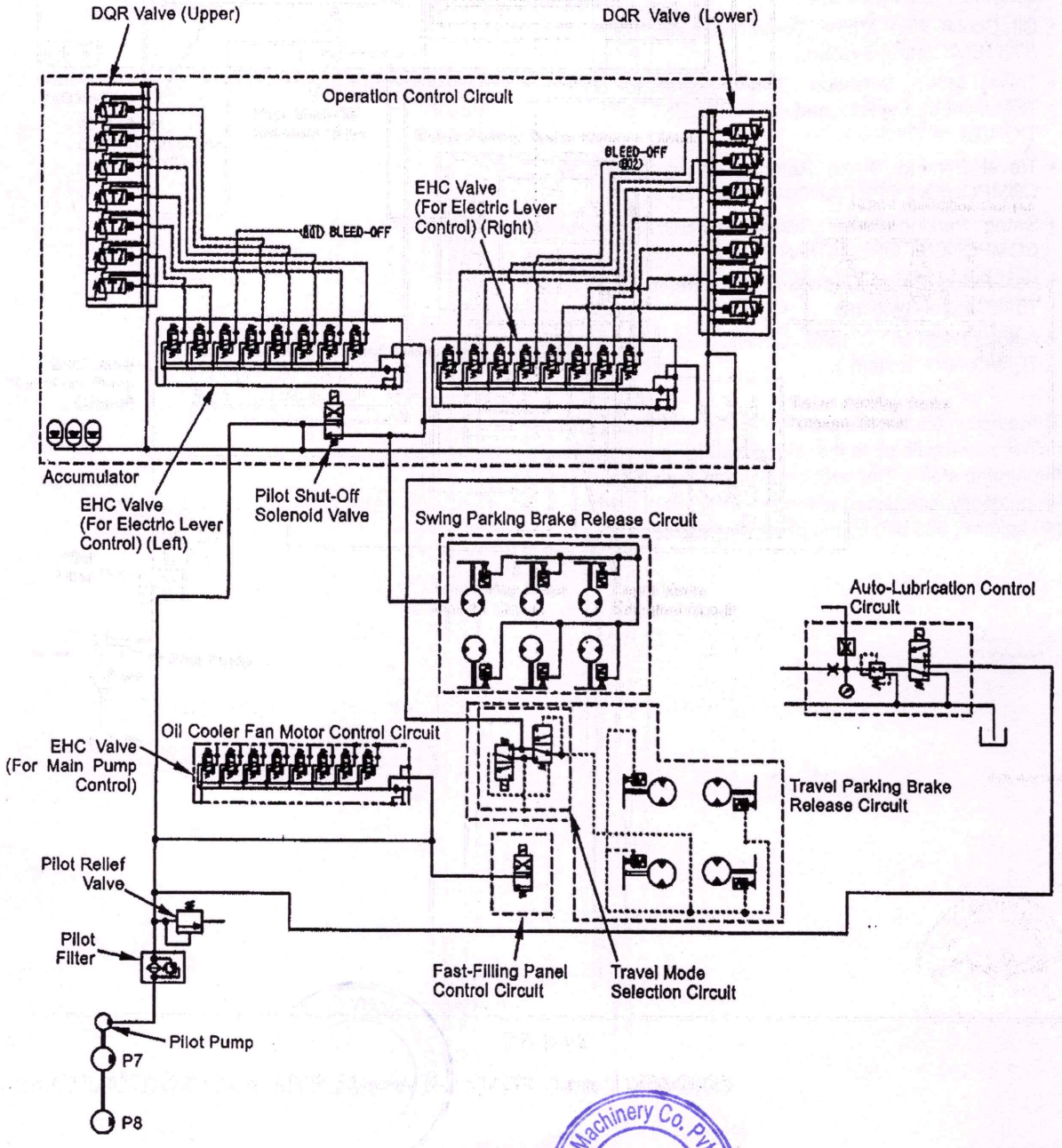

Tata Hitachi Construction Machinery Co. Pvt. Ltd.

SYSTEM / Hydraulic System

Operation Control Circuit

The operation control circuit consists of two systems as described below.
Pressure oil from the pilot pump is delivered to the EHC valve through the pilot check valve and the pilot shut-off solenoid valve.
When the control lever is operated, the EHC valve is operated and pressure oil from the pilot pump serves as the signal pressure to the DQR (Duel Quick Response) valve. (Refer to SYSTEM/Control System.)

DQR Valve System:
Pressure oil from the pilot pump is delivered to the DQR valve.
When the DQR valve is operated by the signal pressure from the EHC valve, pressure oil from the pilot pump is routed to the spool end in the control valve and operates the control valve.

Tata Hitachi Construction Machinery Co. Pvt. Ltd.

SYSTEM / Hydraulic System

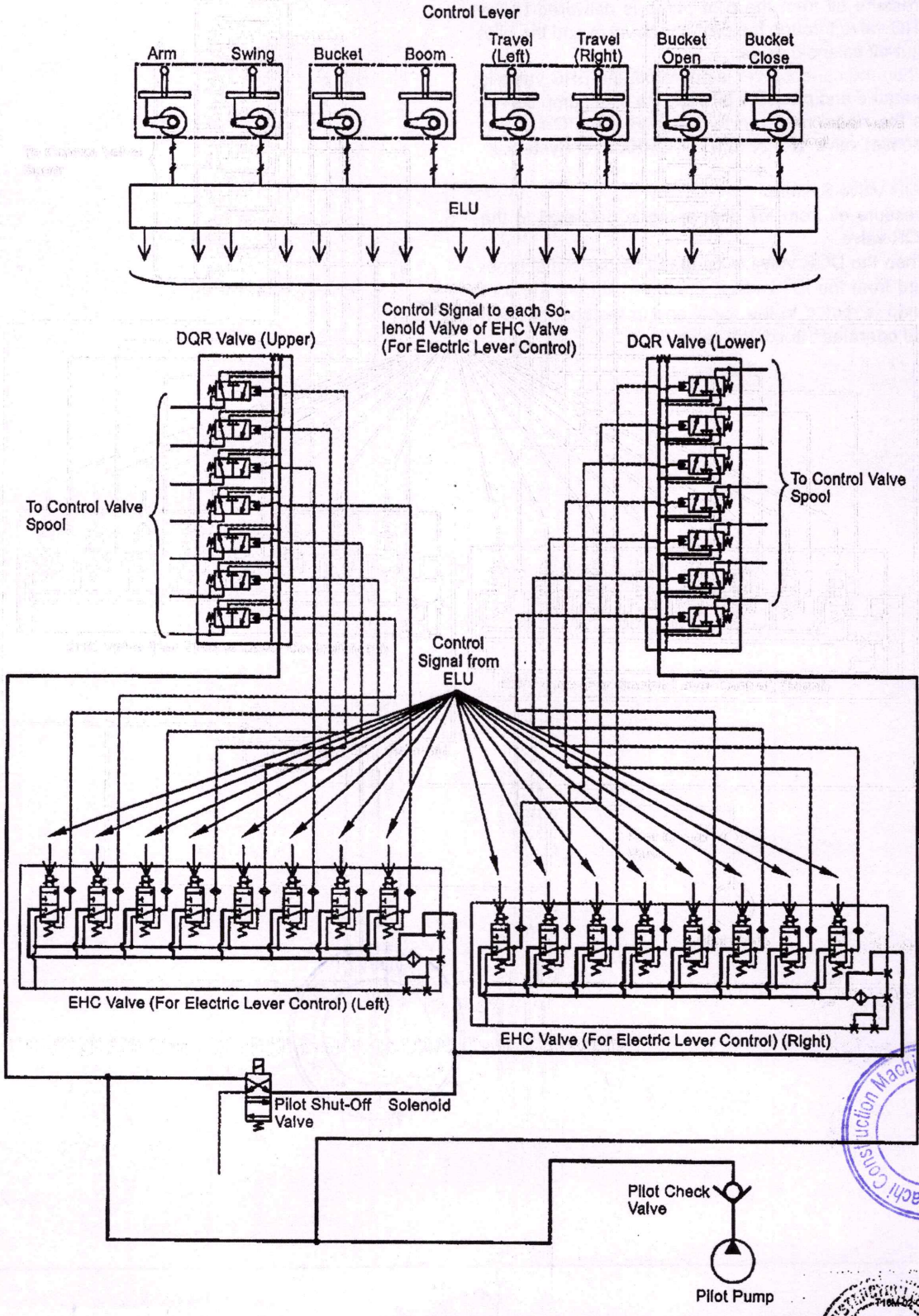

SYSTEM / Hydraulic System

1. When the control lever is operated, ELU receives signals according to the control lever stroke.
2. ELU operates the EHC valve In response to these signals and hydraulic oil pressure is generated.
   This pressure is routed to the DQR valve and moves the spool in the DQR valve.
3. When the spool in the DQR valve is moved, hydraulic oil pressure is generated according to the DQR valve the spool movement (stroke) in the DQR valve.
   The pressure is routed to the spool in the control valve and moves the spool until the pressure is balanced with spring force.
   Therefore, the spool in the control valve is not controlled by pilot pressure oil through the EHC valve, but by pilot pressure oil through the DQR valve.
4. When the spool is moved, main pressure oil from the control valve is delivered, and operates each motor and cylinder.
5. Returning oil from the control valve is routed to the hydraulic oil tank through the other port in the DQR valve.
   (Refer to COMPONENT OPERATION/DQR Valve.)

Tata Hitachi Construction Machinery Co. Pvt. Ltd.

SYSTEM / Hydraulic System

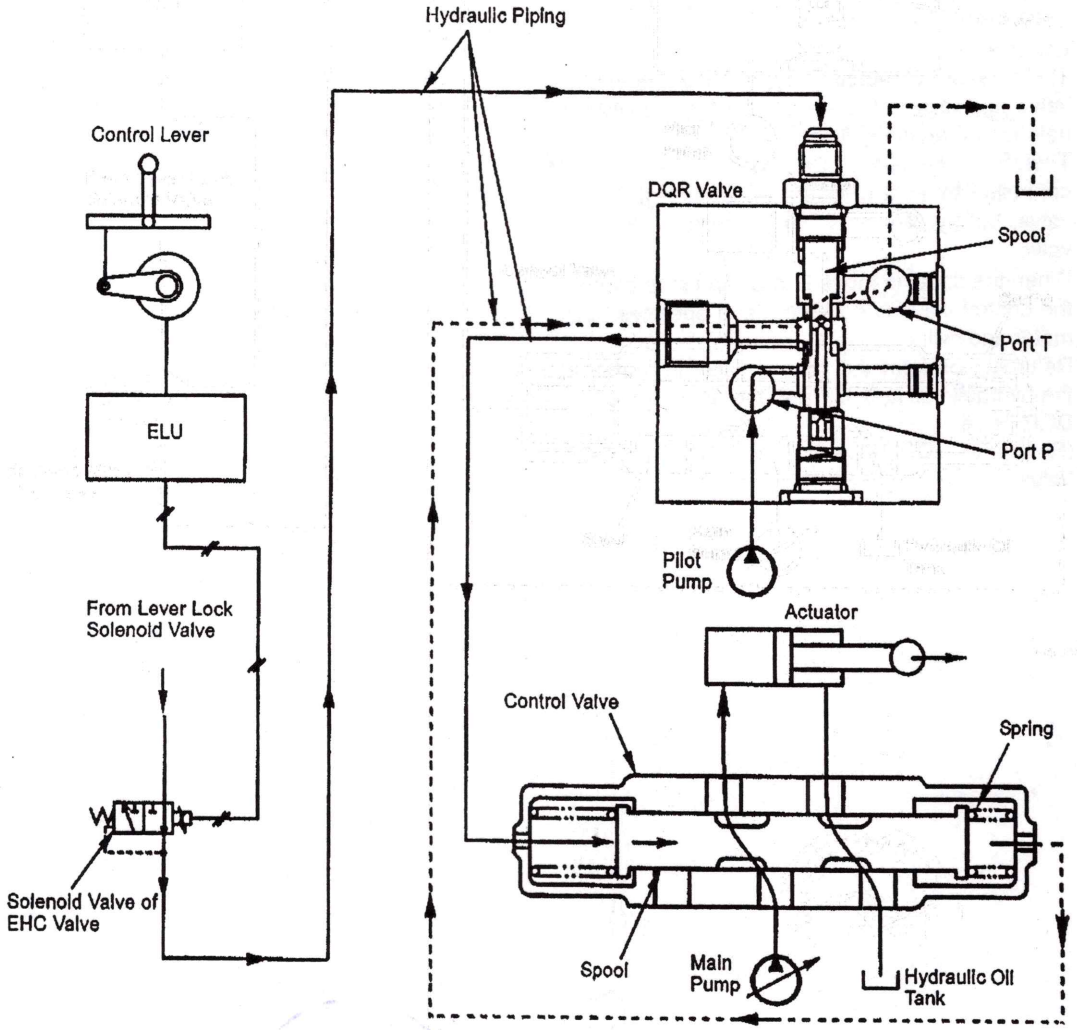

OIL COOLER FAN MOTOR CIRCUIT

Pressure oil from the oil cooler fan motor drive pump drives the oil cooler fan motor.

AIR CONDITIONER COMPRESSOR MOTOR CIRCUIT

Pressure oil from the air conditioner compressor drive pump drives the air conditioner compressor drive motor.

PUMP TRANSMISSION OIL COOLING CIRCUIT

The pump transmission oil circulation pump draws pressure oil from the pump transmission through the filters. The pressure oil is routed to the pump transmission oil cooler and is returned to the pump transmission after being cooled.

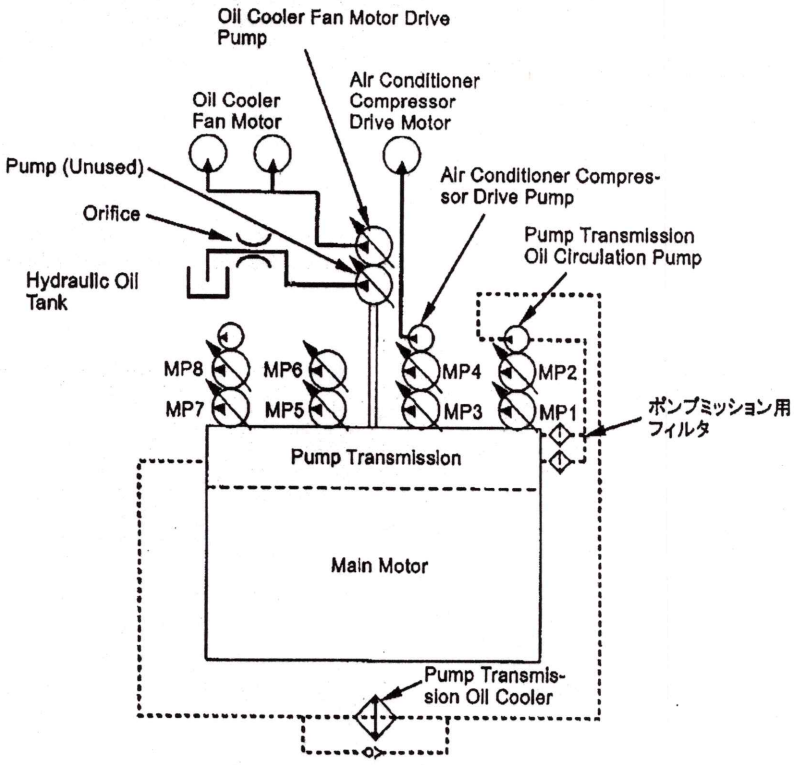

T18U-02-04-001

NOTE: Pressure oil from the pump (unused) flows back to the hydraulic oil tank through the orifice.

TRAVEL SHOCK DAMPER/TRAVEL STOP CIRCUIT

Purpose

This protects the front idlers from shocks applied. Depending on shocks applied to the front idlers, this functions as follows.

- When ordinary shocks are applied:
  The accumulators reduces shocks.
- When excessive shocks are applied:
  Refer to Cushion Cylinder End Travel Limit Control in Control System.

Operation

- When ordinary shocks are applied:
  When operating the travel lever, ELU operates the EHC valve. (Refer to Operation Control Circuit.) Pilot pressure is routed to the DQR valve through the EHC valve. Pressure oil from the pilot pump shifts the travel spool in the control valve through the DQR valve. Therefore, main pressure is delivered to travel motors (left and right) and the machine starts traveling. At the same time, main pressure for travel is reduced and is delivered to the cushion cylinder.
  When shocks are applied to the front idler, the cushion piston is pushed. Consequently, hydraulic oil behind the cushion piston flows to the accumulator. The bladder in the accumulator is contracted and reduces shocks.

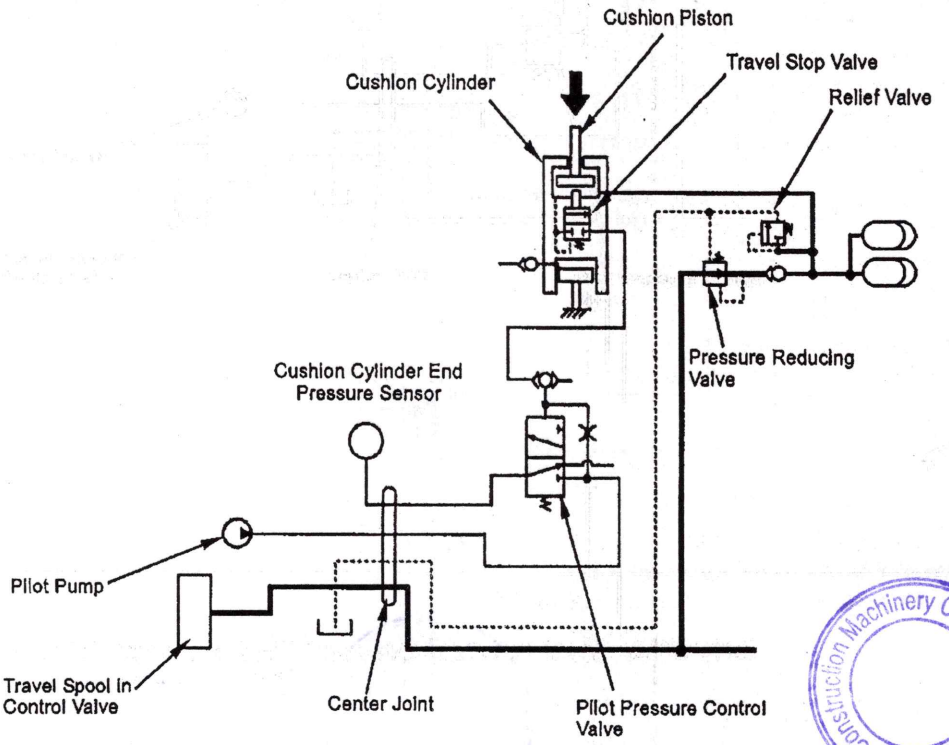

EX-6 series

HITACHI

Reliable solutions

EX3600

Specifications

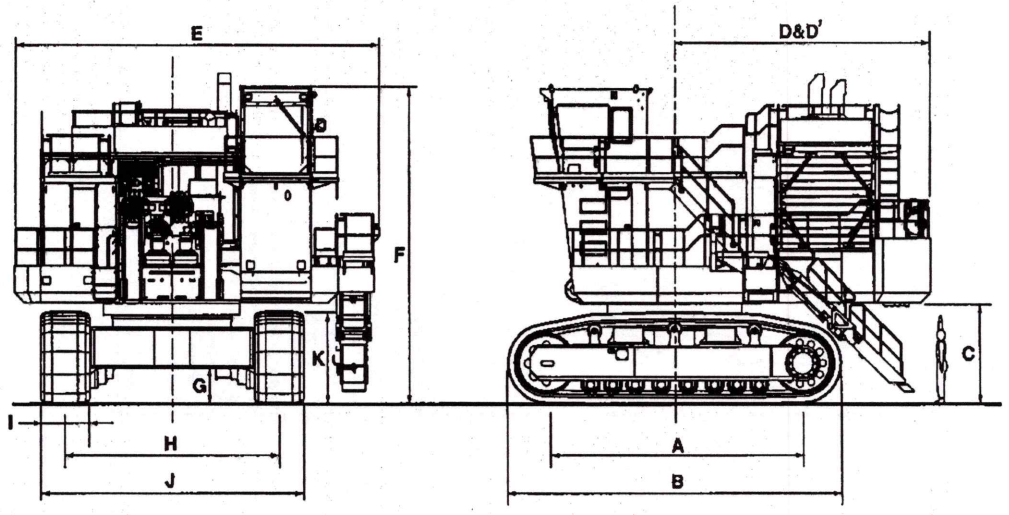

Illustrations show diesel engine type.

A	Distance between tumblers	6 660 mm
B	Undercarriage length	8 700 mm
C	Counterweight clearance	2 440 mm
D	Rear-end swing radius	6 780 mm
D'	Rear-end length	6 650 mm
E	Overall width of upperstructure	9 420 mm
F	Overall height of cab	7 830 mm
G	Minimum ground clearance	905 mm
H	Track gauge	5 500 mm
I	Track shoe width	1 270 mm
J	Undercarriage width	6 770 mm
K	Track height	2 315 mm

HYDRAULIC EXCAVATOR

EX3600-6 with Diesel Engine	**Engine Gross Power : 1 450 kW (1 944 HP)** **Operating Weight : Loading Shovel : 362 000 kg** **Backhoe : 359 000 kg**
EX3600E-6 with Electric Motor	**Power Output : 1 200 kW** **Operating Weight : Loading Shovel : 353 000 kg** **Backhoe : 350 000 kg**
Bucket Capacity	**Loading Shovel Bucket : Heaped : 21.0 m^3 - 23.0 m^3** **Backhoe Bucket : SAE, PCSA Heaped : 22.0 m^3** **CECE Heaped : 19.2 m^3**

SPECIFICATIONS

EX3600-6

ENGINE

Model	Cummins QSKTA60-CE
Emission certification	U.S.EPA Tire 2
Type	Water-cooled, 4-cycle, 16-cylinder, turbo-charged and after-cooled, direct injection chamber-type diesel engine
Rated power	
SAE J1995, gross	1 450 kW (1 944 HP) at 1 800 min^{-1} (rpm)
Net	1 450 kW (1 944 HP) at 1 800 min^{-1} (rpm)
Maximum torque	8 364 N·m at 1 500 min^{-1} (rpm)
Piston displacement	60.0 L
Bore and stroke	159 mm x 190 mm
Starting system	24 V electric motor
Batteries	4 x 12 V, 4 x 220 AH

HYDRAULIC SYSTEM

Hitachi's ETS (Electronic Total control System) can achieve maximum job efficiency by reducing fuel consumption and noise levels, while maximizing productivity through the optimization of engine-pump functions with excellent controllability increasing operator comfort.

- E-P Control (Computer-aided Engine-Pump Control system)
  - Main pumps regulated by electric engine-speed sensing control system.
- HIHS (Optimum Hydraulic System)
  - 4 main pumps and 4 valves system enable both independent and combined operations of all functions.
- EPS (Fuel-saving Pump System)
  - EPS minimizes energy loss with superior performance in fine control.
- Auto-idling system for saving fuel and reducing noise
- Hydraulic drive cooling-fan system for oil cooler and radiator.
- Forced-lubrication and forced-cooling pump drive system

Main pumps	8 variable-displacement,axial piston pumps for front attachment,travel and swing
Max. oil flow	8 x 500 l /min
Pilot pump	1 gear pump
Max. oil flow	110 L/min

Relief Valve Settings

Implement circuit	29.4 MPa (300 kgf/cm^2)
Swing circuit	29.4 MPa (300 kgf/cm^2)
Travel circuit	29.4 MPa (300 kgf/cm^2)
Pilot circuit	3.9 MPa (40 kgf/cm^2)

Hydraulic Cylinders

High-strength piston rods and tubes. Cylinder cushion mechanisms are provided for boom, arm, bucket and dump cylinders.
Bucket cylinders of loading shovel are provided with protector.

Cylinder Dimensions
Loading Shovel

Boom	2	360 mm	260 mm
Arm	1	300 mm	220 mm
Bucket	2	280 mm	200 mm
Dump	2	225 mm	130 mm
Level	1	360 mm	260 mm

Backhoe

Boom	2	360 mm	260 mm
Arm	2	300 mm	220 mm
Bucket	2	250 mm	180 mm

Hydraulic Filters

All hydraulic circuits have high-quality hydraulic filters for protection against oil contamination and longer life of hydraulic components.

	Qty.	
Full flow filter	5	10 µm
High pressure strainer (In main & swing pump delivery line)	8	120 µm
Drain filter (For all plunger type pumps & motors)	1	10 µm
By-pass filter (In oil cooler by-pass line)	1	5 µm
Pilot filter	1	10 µm

These filters are centralized in arrangement for facilitating maintenance.

CONTROLS

2 Implement Levers
Electric joystick control levers. Right lever is for boom and bucket control, left lever for swing and arm control. 2 pedals provided for opening/closing the bottom dump bucket.

2 Travel Levers with Pedals
Remote-controlled hydraulic servo system. Independent drive at each track allows counter rotation of tracks.

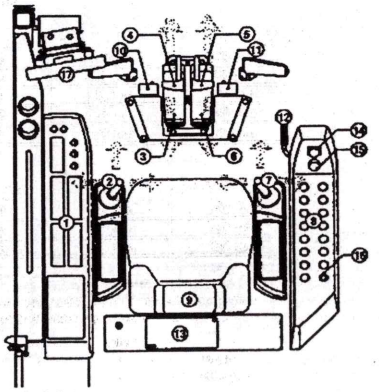

1. Left Console
2. Left Control Lever/Horn Switch
3. Left Travel Pedal
4. Left Travel Lever
5. Right Travel Lever
6. Right Travel Pedal
7. Right Control Lever/Horn Switch
8. Right Console
9. Operator's Seat
10. Bucket Close Pedal (For Loading Shovel)
11. Bucket Open Pedal (For Loading Shovel)
12. Pilot Control Shut-Off Lever
13. Rear Console
14. Emergency Engine Stop Switch
15. Engine Speed Control Dial
16. Key Switch
17. Monitor Display

UPPERSTRUCTURE

Revolving Frame
A deep, full-reinforced box section. Heavy-gauge steel plates used for ruggedness.

Deck Machinery
Maintenance accessibility is the major feature in the lay-out of deck machinery. Sidewalks provide easy access to engine, hydraulic and electrical components. ISO-met stairs and handrails. Sidewalks and stairs are provided with skid-resistant plates.

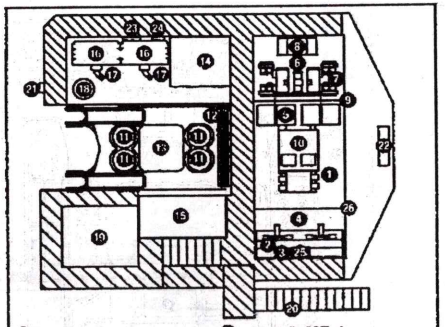

1. Engine
2. Engine Radiator
3. LTA Radiator
4. Fan Motor x 4
5. Air Filter x 4
6. Hydraulic Pump x 8
7. High-Pressure Strainer x 8
8. Battery Unit
9. Engine-Pump Bulkhead
10. Muffler
11. Swing Device x 4
12. Control Valve x 4
13. Center Joint
14. Hydraulic Oil Tank
15. Fuel Tank
16. Hydraulic Oil Cooler x 4
17. Hydraulic Oil Cooling Fan Motor x 2
18. Lubricator
19. Cab
20. Folding Stairs
21. Ladder
22. Reserve tank (engine oil)
23. Pump Transmission oil cooler
24. Fuel cooler
25. Reserve tank(coolant)
26. Engine-Radiator Bulkhead

Swing Device
4 high-torque, axial-piston motors with two-stage planetary gear bathed in oil. Swing circle with dirt seals is a heavy-duty, triple-row, cylindrical roller bearing. Induction-hardened internal swing circle gear and pinion immersed in lubricant. Parking brake of spring-set/hydraulic-released disc type. This parking brake is manually releasable.

Swing speed	3.2 min^{-1} (rpm)

Operator's Cab
The sturdy cab, with OPG top guard Level II (ISO), helps protect the operator from falling objects. Independent, pressurized, 1 800 mm wide, 2 150 mm high, roomy 7.5 m^3 cab with tinted-glass windows features all-round visibility. Air-suspension type, fully adjustable reclining seat with armrests; movable with or without front & swing control levers by slide. Instruments and control panel are within easy reach of the operator. 3 air conditioner system condition.

Noise level	76 dB(A) in the cab; on max. engine speed under no-load condition
Eye level height	6 760 mm

Tata Hitachi Construction Machinery Co. Pvt. Ltd.

Annexure - S
Page 291
Contract No. EC2D/20 Cum[illegible] Supply of [illegible] Dated: 17/08/2015

SPECIFICATIONS

EX8600-6

UNDERCARRIAGE

Tracks

Shovel-type undercarriage. Dual-flanged-type bolt linkage for side frame and X-form center frame assures durability. Heavy-duty track frame of all-welded, stress-relieved structure. Top-grade materials used for toughness. Lifetime-lubricated induction-hardened track rollers, idlers and drive tumblers with floating seals. Specially heat-treated connection pins. Hydraulic track adjuster provided with N_2 gas accumulator and relief valve. Track adjuster provided with protection device against abnormal tension. Travel motion alarm device.

Shovel-type Undercarriage

Triple grouser shoes of induction-hardened cast steel.

Shoe width ..... 1 270 mm

Numbers of Rollers and Shoes on Each Side

Upper rollers 3
Lower rollers 8
Track shoes 38

Travel Device

Each track driven by high-torque, axial piston motors, allowing counter rotation of tracks. 2-stage planetary gear plus spur gears reduction device. Dual-support-type traction device. Parking brake of spring-set/hydraulic-released disc type. This parking brake is manually releasable.

Travel speeds ..... High : 0 to 2.2 km/h
Low : 0 to 1.7 km/h

WEIGHTS AND GROUND PRESSURE

Loading Shovel

Equipped with 21.0 m³ (heaped) bottom dump bucket

Triple grousers	1 270 mm	362 000 kg	190 kPa (1.94 kgf/cm²)

Backhoe

Equipped with 9.6 m BE-boom, 4.5 m BE-arm and 22.0 m³ (SAE, PCSA heaped) bucket

Triple grousers	1 270 mm	359 000 kg	188 kPa (1.92 kgf/cm²)

SERVICE REFILL CAPACITIES

Fuel tank		7 450
Engine coolant		614
Engine oil	Engine oil pan	261
	Reserve tank	280
Pump transmission device		62
Swing device		4 x 75
Travel device		2 x 220
Hydraulic system		4 000
Hydraulic oil tank		1 900

LOADING SHOVEL ATTACHMENTS

Boom and arm are of all-welded, low-stress, high-tensile strength steel full-box section design. Efficient, automatic level crowding achieved by one-lever control as the parallel link mechanism keeps the bucket digging angle constant, and level cylinder circuit maintains the bucket height constant. (Auto-Leveling Crowd Mechanism)
Auto-lubrication system for all pins is standard.

Bucket

					Materials density
21.0 m³	4 160 mm	5	28 300 kg	Bottom dump type general purpose bucket	1 800 kg/m³ or less
23.0 m³	4 160 mm	5	28 400 kg	Bottom dump type light duty bucket	1 600 kg/m³ or less

WORKING RANGES

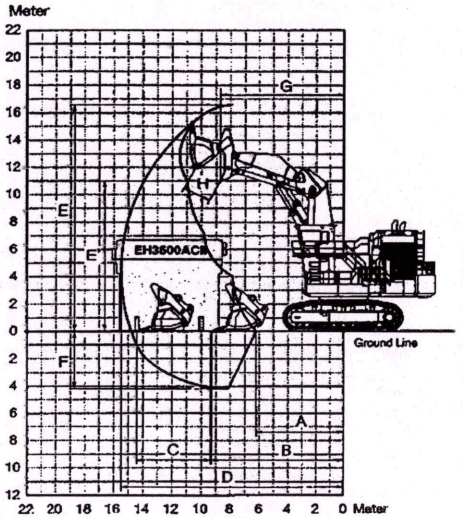

Unit: mm

		21.0 m³	23.0 m³
A	Min. digging distance	6 190	6 180
B	Min. level crowding distance	9 300	9 360
C	Level crowding distance	5 100	5 080
D	Max. digging reach	15 470	15 550
E	Max. cutting height	16 560	10 990
E'	Max. dumping height	10 990	16 640
F	Max. digging depth	4 160	4 250
G	Working radius at max. dumping height	8 650	8 650
H	Max. bucket opening width	1 950	1 950
Arm crowding force on ground		1 108 kN (113 000 kgf)	1 084 kN (111 000 kgf)
Bucket digging force		1 166 kN (119 000 kgf)	1 137 kN (116 000 kgf)

Tata Hitachi Construction Machinery Co. Pvt. Ltd.

Contract no CC-2/2025 Online Service/R-151/299 Date:12/08/2025

SPECIFICATIONS

EX3600-6

BACKHOE ATTACHMENTS

Boom and arm are of all-welded, low-stress, full-box section design.
Bucket of all-welded, high-strength steel structure. Bucket/arm joint pins are floating type.
Replaceable thrust plates are provided with bucket/arm joint part. Auto-lubrication system for all pins is standard.

Bucket

22.0 m³	19.2 m³	3 790 mm	-	6	18 400 kg	○	1 800 kg/m³ or less

General purpose bucket

WORKING RANGES

Boom

Unit mm

A Max. digging reach		18 240
A' Max. digging reach (on ground)		17 660
B Max. digging depth		8 630
B' Max. digging depth (2.5 m level)		8 540
C Max. cutting height		17 710
D Max. dumping height		11 540
D' Min. dumping height		4 960
E Min. swing radius		6 560
F Max. vertical wall		4 180
G Min. level crowding distance		6 720
Bucket digging force	ISO	1 050 kN (107 000 kgf)
	SAE: PCSA	932 kN (95 000 kgf)
Arm crowd force	ISO	951 kN (97 000 kgf)
	SAE: PCSA	922 kN (94 000 kgf)

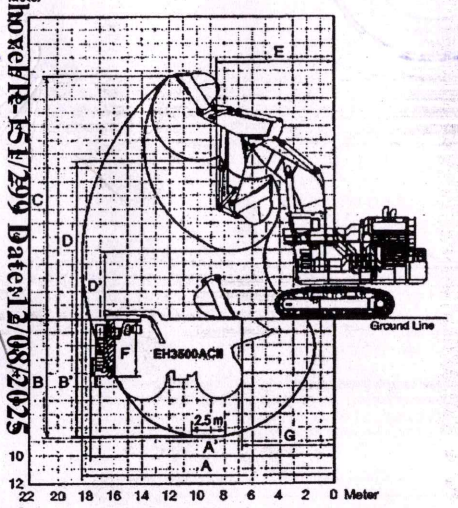

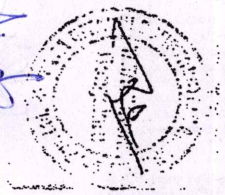

Tata Hitachi Construction Machinery Co. Pvt. Ltd.

EQUIPMENT

EX3600-6

STANDARD EQUIPMENT

ENGINE
- Auto-idle system
- Cartridge-type engine oil bypass filter
- Cartridge-type engine oil filter
- Cartridge-type fuel filter
- Emergency engine stop system
- Fan guard
- Heavy-duty type air cleaner with dust ejector
- Hydraulic drive cooling-fan system
- Isolation-mounted engine
- 140 A alternator

HYDRAULIC SYSTEM
- Bypass filter
- Control valve with main relief valve
- Drain filter
- E-P control system
- Forced-lubrication and forced cooling pump drive system
- FPS (Fuel-saving Pump System)
- Full-flow filter
- High-pressure strainer
- Hydraulic drive cooling-fan system
- OHS (Optimum Hydraulic System)
- Pilot filter
- Suction filter

CAB
- Adjustable reclining seat with air suspension
- Air conditioner with defroster
- Air horn with electric compressor
- Auto-tuning AM-FM radio with digital clock
- Emergency escape device
- Evacuation hammer
- Floor mat
- Fluid-filled elastic mounts
- Footrest
- Front windshield washer
- Hot & Cool-box
- Laminated glass windshield
- OPG top guard level II (ISO)
- Parallel-link-type intermittent windshield wiper
- Pilot control shut-off lever
- Rearview mirror
- Reinforced/tinted (bronze color) glass side and rear windows
- Seat belt
- Storage spaces
- Trainer's seat

MONITOR SYSTEMS
- Meters:
  Ambient temperature
  Battery voltage gauge
  Engine coolant temperature gauge
  Engine oil pressure gauge
  Engine oil temperature gauge
  Fuel gauge
  Hour meter
  Hydraulic oil temperature gauge
  Tachometer
- Pilot lamps (Green):
  Auto-idle
  Pre-lubrication
  Travel mode
- Warning lamps (Red):
  Alternator
  Auto-lubrication
  Coolant level
  Coolant overheat
  Electric lever
  Emergency engine stop
  Engine oil pressure
  Engine over run
  Engine stop
  Fast-filling
  Hydraulic oil level
  Pump transmission oil level indicator
  Stop valve
  Tension
- Warning lamp (Yellow):
  Air cleaner restriction
  Electrical equipment box
  Engine warning
  Exhaust temperature
  Fuel temperature
  Hydraulic oil overheat
  Pump contamination
  Stairway position
- Alarm buzzers:
  Air intake manifold temperature
  Crank case pressure
  Electric lever fault
  Engine coolant level
  Engine coolant pressure
  Engine oil pressure
  Engine oil temperature
  Fast-filling system panel position
  Fuel temperature
  Hydraulic oil level
  Overheat
  Pump transmission oil level
  Stairway position
  Stop valve close

DATA LOGGING SYSTEM
- DLU (Data-logging unit) continuously records performance of the engine and the hydraulic system. The record can be downloaded by PC.

LIGHTS
- 2 cab lights
- 2 entrance lights
- 7 maintenance lights
- 9 working lights

UPPERSTRUCTURE
- Folding stairs with wide steps
- Hydraulic drive grease gun with hose reel
- Lockable machine covers
- Swing parking brake
- 39 900 kg counterweight

UNDERCARRIAGE
- Hydraulic track adjuster with N2 gas accumulator and relief valve
- Travel motion alarm device
- Travel parking brake
- 1 270 mm triple grouser shoes

MISCELLANEOUS
- Auto-lubrication system (Lincoln) for front-attachment pins, swing bearing, and center joint.
- Engine oil reserve system
- Recirculation air filter for air conditioner
- Stairs and handrails (Meeting ISO)
- Stop valve for transport and reassembly
- Ventilation air filter for air conditioner
- 12 V power terminal board

FAST-FILLING SYSTEM
- Fast-filling system (Wiggins) for fuel, hydraulic oil, coolant, swing device oil, pump transmission oil, engine oil, and grease (couplers not included).

OPTIONAL EQUIPMENT

- Cold weather package*
- Communication system (alternative) **
  GPHS communication system
  Satellite data transmitting system
- DTU (Data Transfer Unit)**
  for Fleet management system (provided by Wenco etc.) connection
- Electric oil pump to draw hydraulic oil from suction and return pipe lines
- Fast-filling couplers
- Highland application*
- Standard tool kit
- Travel device guard
- Travel motor guard
- WIU (Wireless Interface Unit) **
- 4 color monitor cameras: 2 front and 2 rear
- 10 high brightness working lights

* Engineered on request.
** The availability of the system depends on licensing regulations in each country. Please contact Hitachi dealer for more information.

Annexure - s
Page 293

SPECIFICATIONS

EX3600E-6

ELECTRIC MOTOR

High-Voltage, Three Phase, Squirrel Cage Induction Motor, Totally Enclosed Air-to-Air-Cooled (TEAAC).

Type	HITACHI TFOA-KK
Rating	
Rated continuous output	1 200 kW
Voltage	AC 6 000 - 6 600 V / 50 Hz AC 6 600 - 6 900 V / 60 Hz
Number of poles	4
Synchronous RPM	1 500 min^{-1} / 50 Hz 1 800 min^{-1} / 60 Hz
Rated current	124 A @ 6 600 V
Insulation class	F class B raise

Space heater included.
Thermo-guard (temperature detector)
Starting condition ..... Reactor 50 % tap

HYDRAULIC SYSTEM

- HHS (Optimum Hydraulic System)
- 3 main pumps and 4 valves system enable both independent and combined operations of all functions.
- Hydraulic drive cooling-fan system for oil cooler.
- Forced-lubrication and forced-cooling pump drive system

Main pumps	8 variable-displacement,axial piston pumps for front attachment,travel and swing
Max. oil flow	8 x 500 L/min
Pilot pump	1 gear pump
Max. oil flow	110 L/min

Relief Valve Settings

Implement circuit	29.4 MPa (300 kgf/cm^2)
Swing circuit	29.4 MPa (300 kgf/cm^2)
Travel circuit	29.4 MPa (300 kgf/cm^2)
Pilot circuit	3.9 MPa (40 kgf/cm^2)

Hydraulic Cylinders
High-strength piston rods and tubes. Cylinder cushion mechanisms are provided for boom, arm, bucket and dump cylinders.
Bucket cylinders of loading shovel are provided with protector.

Cylinder Dimensions
Loading Shovel

Boom	2	360 mm	260 mm
Arm	1	300 mm	220 mm
Bucket	2	280 mm	200 mm
Dump	2	225 mm	130 mm
Level	1	360 mm	260 mm

Backhoe

Boom	2	360 mm	260 mm
Arm	2	300 mm	220 mm
Bucket	2	250 mm	180 mm

Hydraulic Filters
All hydraulic circuits have high-quality hydraulic filters for protection against oil contamination and longer life of hydraulic components.

	Qty.	
Full flow filter	5	10 µm
High pressure strainer (In main & swing pump delivery line)	8	120 µm
Drain filter (For all plunger type pumps & motors)	1	10 µm
By-pass filter (In oil cooler by-pass line)	1	5 µm
Pilot filter	1	10 µm

These filters are centralized in arrangement for facilitating maintenance.

CONTROLS

2 Implement Levers
Electric joystick control levers. Right lever is for boom and bucket control, left lever for swing and arm control. 2 pedals provided for opening/closing the bottom dump bucket.

2 Travel Levers with Pedals
Remote-controlled hydraulic servo system. Independent drive at each track allows counter rotation of tracks.

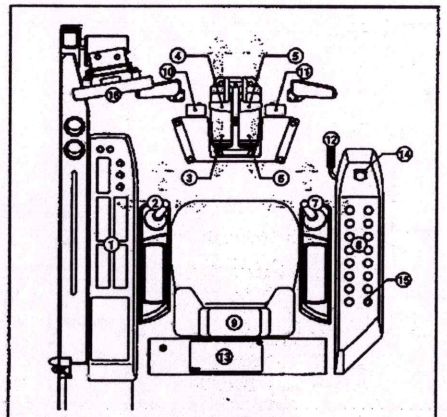

1. Left Console
2. Left Control Lever/Horn Switch
3. Left Travel Pedal
4. Left Travel Lever
5. Right Travel Lever
6. Right Travel Pedal
7. Right Control Lever/Horn Switch
8. Right Console
9. Operator's Seat
10. Bucket Close Pedal (For Loading Shovel)
11. Bucket Open Pedal (For Loading Shovel)
12. Pilot Control Shut-Off Lever
13. Rear Console
14. Emergency Motor Stop Switch
15. Key Switch
16. Monitor Display

UPPERSTRUCTURE

Revolving Frame
A deep, full-reinforced box section. Heavy-gauge steel plates used for ruggedness.

Deck Machinery
Maintenance accessibility is the major feature in the lay-out of deck machinery. Sidewalks provide easy access to electric motor, hydraulic and electrical components. ISO-met stairs and handrails. Sidewalks and stairs are provided with skid-resistant plates.

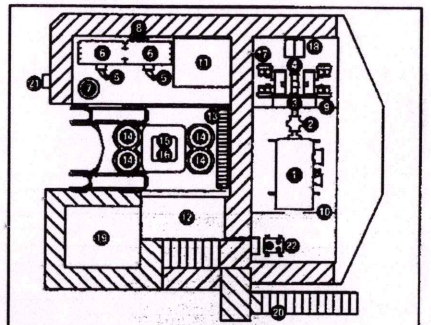

1. Main Motor
2. Coupler
3. Pump Drive Unit
4. Hydraulic Pump x 8
5. Hydraulic Oil Cooling Fan Motor x 2
6. Hydraulic Oil Cooler x 4
7. Lubricator
8. Pump Transmission Oil Cooler
9. Motor-Pump Bulkhead
10. Bulkhead
11. Hydraulic Oil Tank
12. Cubicle
13. Control Valve x 4
14. Swing Device x 4
15. Slip Ring
16. Center Joint
17. High-Pressure Strainer x 8
18. Battery x 2
19. Cab
20. Folding Stairs
21. Ladder
22. Cab Heater Unit

Swing Device
4 high-torque, axial-piston motors with two-stage planetary gear bathed in oil. Swing circle with dirt seals is a heavy-duty, triple-row, cylindrical roller bearing. Induction-hardened internal swing circle gear and pinion immersed in lubricant. Parking brake of spring-set/hydraulic-released disc type. This parking brake is manually releasable.
Swing speed ..... 2.9 min^{-1} (rpm)

Operator's Cab
The sturdy cab, with the top guard conforming to OPG Level II (ISO), helps protect the operator from falling objects. Independent, pressurized, 1 800 mm wide, 2 150 mm high, roomy 7.5 m^3 cab with tinted-glass windows features all-round visibility. Air-suspension type, fully adjustable reclining seat with armrests; movable with or without front & swing control levers by slide. Instruments and control panel are within easy reach of the operator. Air conditioner system.
Eye level height ..... 6 760 mm

Contract No. ECD/ACQ/Engg/Hoyer/R.11/22 Date:12/08/2025
Page 294
Annexure - S

SPECIFICATIONS

EX3600E-6

UNDERCARRIAGE

Tracks
Shovel-type undercarriage. Dual-flanged-type bolt linkage for side frame and X-form center frame assures durability. Heavy-duty track frame of all-welded, stress-relieved structure. Top-grade materials used for toughness. Lifetime-lubricated induction-hardened track rollers, idlers and drive tumblers with floating seals. Specially heat-treated connection pins. Hydraulic track adjuster provided with N_2 gas accumulator and relief valve. Track adjuster provided with protection device against abnormal tension. Travel motion alarm device.

Shovel-type Undercarriage
Triple grouser shoes of induction-hardened cast steel.
Shoe width ..... 1 270 mm

Numbers of Rollers and Shoes on Each Side
Upper rollers 3
Lower rollers 8
Track shoes 38

Travel Device
Each track driven by high-torque, axial piston motors, allowing counter-rotation of tracks. 2-stage planetary gear plus spur gears reduction device. Dual-support-type traction device. Parking brake of spring-set/hydraulic-released disc type. This parking brake is manually releasable.
Travel speeds ..... High : 0 to 2.1 km/h
Low : 0 to 1.6 km/h

WEIGHTS AND GROUND PRESSURE

Loading Shovel
Equipped with 21.0 m^3 (heaped) bottom dump bucket

Triple grousers	1 270 mm	353 000 kg	185 kPa (1.89 kgf/cm^2)

Backhoe
Equipped with 9.6 m BE-boom, 4.5 m BE-arm and 22.0 m^3 (SAE, PCSA heaped) bucket

Triple grousers	1 270 mm	350 000 kg	184 kPa (1.88 kgf/cm^2)

SERVICE REFILL CAPACITIES

Pump transmission device	62
Swing device	4 x 75
Travel device	2 x 220
Hydraulic system	4 000
Hydraulic oil tank	1 900

LOADING SHOVEL ATTACHMENTS

Boom and arm are of all-welded, low-stress, high-tensile strength steel full-box section design. Efficient, automatic level crowding achieved by one-lever control as the parallel link mechanism keeps the bucket digging angle constant, and level cylinder circuit maintains the bucket height constant. (Auto-Leveling Crowd Mechanism) Auto-lubrication system for all pin is standard.

Bucket

21.0 m^3	4 160 mm	5	28 300 kg	Bottom dump type general purpose bucket	1 800 kg/m^3 or less
23.0 m^3	4 160 mm	5	28 400 kg	Bottom dump type light duty bucket	1 600 kg/m^3 or less

WORKING RANGES

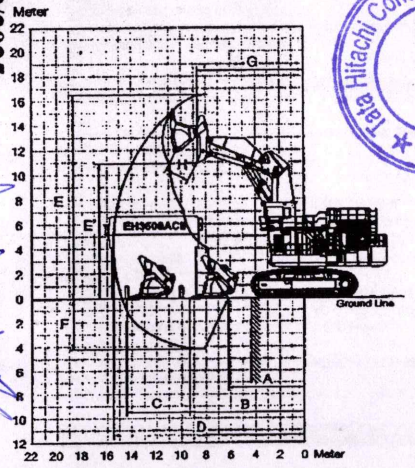

Unit: mm

A	Min. digging distance	6 190	6 180
B	Min. level crowding distance	9 300	9 360
C	Level crowding distance	5 100	5 080
D	Max. digging reach	15 470	15 550
E	Max. cutting height	16 560	10 990
E'	Max. dumping height	10 990	16 640
F	Max. digging depth	4 160	4 250
G	Working radius at max. dumping height	8 650	8 650
H	Max. bucket opening width	1 950	1 950
Arm crowding force on ground		1 108 kN (113 000 kgf)	1 084 kN (111 000 kgf)
Bucket digging force		1 166 kN (119 000 kgf)	1 137 kN (116 000 kgf)

Tata Hitachi Construction Machinery Co. Pvt. Ltd.

BACKHOE ATTACHMENTS

Boom and arm are of all-welded, low-stress, full-box section design. Bucket of all-welded, high-strength steel structure. Bucket/arm joint pins are floating type.
Replaceable thrust plates are provided with bucket/arm joint part. Auto-lubrication system for all pins is standard.

Bucket

22.0 m^3	19.2 m^3	3 790 mm	-	6	18 400 kg	O	1 800 kg/m^3 or less

O : General purpose bucket

WORKING RANGES

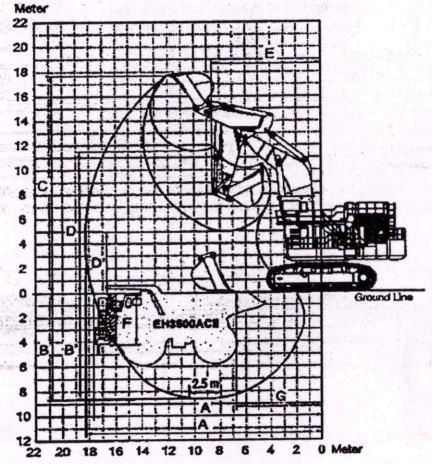

Unit: mm

		9.6 m arm	4.5 m arm
		22.0 m^3	22.0 m^3
A	Max. digging reach	18 240	
A'	Max. digging reach (on ground)	17 660	
B	Max. digging depth	8 630	
B'	Max. digging depth (2.5 m level)	8 540	
C	Max. cutting height	17 710	
D	Max. dumping height	11 540	
D'	Min. dumping height	4 960	
E	Min. swing radius	8 560	
F	Max. vertical wall	4 180	
G	Min. level crowding distance	6 720	
Bucket digging force	ISO	1 050 kN (107 000 kgf)	
	SAE: PCSA	932 kN (95 000 kgf)	
Arm crowd force	ISO	951 kN (97 000 kgf)	
	SAE: PCSA	922 kN (94 000 kgf)	

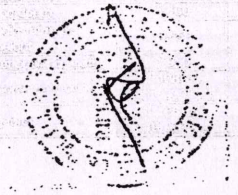

EQUIPMENT

EX3600E-6

STANDARD EQUIPMENT

ELECTRIC MOTOR
- Space heater included
- Thermo-guard (temperature detector)

HYDRAULIC SYSTEM
- Bypass filter
- Control valve with main relief valve
- Drain filter
- Forced-lubrication and forced cooling pump drive system
- Full-flow filter
- High-pressure strainer
- Hydraulic drive cooling-fan system
- HIOS (Optimum Hydraulic System)
- Pilot filter
- Suction filter

CAB
- Adjustable reclining seat with air suspension
- Air-conditioner with defroster
- Air horn with electric compressor
- Auto-tuning AM-FM radio with digital clock
- Emergency escape device
- Evacuation hammer
- Floor mat
- Fluid-filled elastic mounts
- Footrest
- Front windshield washer
- Hot- & cool-box
- Laminated glass windshield
- OPG top guard level II (ISO)
- Parallel-link-type intermittent windshield wiper
- Pilot control shut-off lever
- Rearview mirror
- Reinforced/tinted (bronze color) glass side and rear windows
- Seat belt
- Storage spaces
- Tilter's seat

MONITOR SYSTEMS
- Meters:
  - Ambient temperature
  - Battery voltage gauge
  - Clock
  - Hour meter
  - Hydraulic oil temperature gauge
  - Main motor ammeter
  - Main motor coil temperature gauge
  - Main motor voltmeter
- Pilot lamps (Green):
  - Main motor run
  - Travel mode
- Warning lamps (Red):
  - AC210V power source
  - AC6600V power source
  - Auto-lubrication
  - Battery charge
  - Cable drum
  - Cubicle box
  - Electric lever
  - Emergency motor stop
  - Hydraulic oil level
  - Main motor overheat
  - Main motor start congestion
  - Pump transmission oil level
  - Stop valve
  - Tension
  - 3E relay
- Warning lamps (Yellow):
  - Cab heater
  - Electrical equipment box
  - Hydraulic oil overheat
  - Pump contamination
  - Stairway position
- Warning lamps (Amber):
  - Fast-filling
- Alarm buzzers:
  - AC210V power source
  - AC6600V power source
  - Cable drum
  - Cubicle box
  - Electric lever
  - Fast-filling
  - Hydraulic oil level
  - Main motor overheat
  - Main motor start congestion
  - Pump transmission oil level
  - Stairway position
  - Stop valve
  - 3E relay

DATA LOGGING SYSTEM
- DLU (Data-logging unit) continuously records performance of the hydraulic system. The record can be downloaded by PC.

LIGHTS
- 2 cab lights
- 2 entrance lights
- 7 maintenance lights
- 9 working lights

UPPERSTRUCTURE
- Folding stairs with wide steps
- Hydraulic drive grease gun with hose reel
- Lockable machine covers
- Swing parking brake
- 39 900 kg counterweight

UNDERCARRIAGE
- Hydraulic track adjuster with N_2 gas accumulator and relief valve
- Travel motion alarm device
- Travel parking brake
- 1 270 mm triple grouser shoes

MISCELLANEOUS
- Auto-lubrication system (Lincoln) for front-attachment pins, swing bearing, and center joint.
- Recirculation air filter for air conditioner
- Stairs and handrails (Meeting ISO)
- Stop valve for transport and reassembly
- Ventilation air filter for air conditioner
- 12 V power terminal board

FAST-FILLING SYSTEM
- Fast-filling system (Wiggins) for hydraulic oil, swing device oil, pump transmission oil, and grease (couplers not included).

OPTIONAL EQUIPMENT
- Cold weather package*
- Communication system (alternative) **
  - GPRS communication system
  - Satellite data transmitting system
- DTU (Data Transfer Unit)**
  - for Fleet management system (provided by Wenco etc.) connection
- Electric oil pump to draw hydraulic oil from suction and return pipe lines
- Fast-filling couplers
- Standard tool kit
- Travel device guard
- WIU (Wireless Interface Unit) **
- 4 color monitor cameras : 2 front and 2 rear
- 10 high brightness working lights

* Engineered on request.
** The availability of the system depends on licensing regulations in each country. Please contact Hitachi dealer for more information.

MEMO

Tata Hitachi Construction Machinery Co. Pvt. Ltd.
Page 296
Annexure - s

TRANSPORTATION

Illustrations show diesel engine type.
- Easily assembled owing to local assembling system requiring no welding.

UPPERSTRUCTURE

Unit: mm

Cab assembly
Weight : 1750 kg

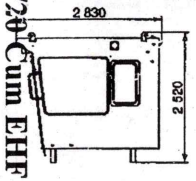

Width : 1 880

Bed (left) assembly
Weight : 9 270 kg

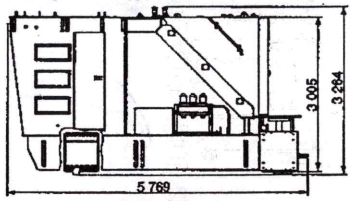

Width : 2 370

Switchbox
Weight : 33 kg

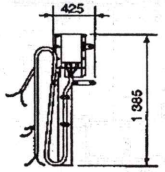

Width : 250

Main frame assembly
Weight : 41 600 kg

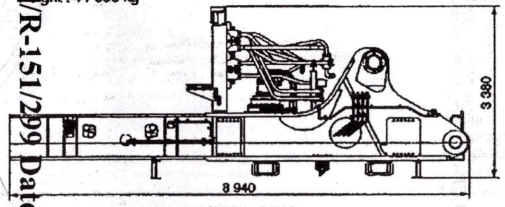

Width : 3 510

Step
Weight : 37 kg

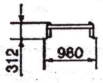

Width : 560

Folding stairs
Weight : 773 kg

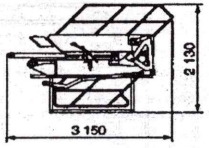

Width : 1 100

Box assembly
Weight : 869 kg

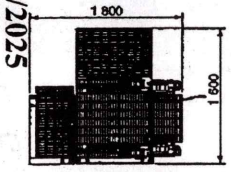

Width : 1 242

Handrail
Weight : 17.5 kg

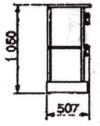

Width : 853

Handrail
Weight : 22.5 kg

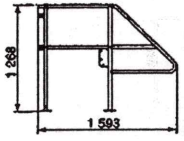

Width : 90

Bed (right) assembly
Weight : 11 700 kg

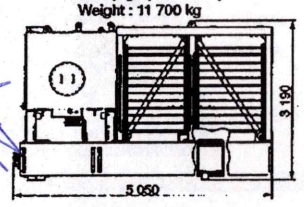

Width : 2 420

Tata Hitachi Construction Machinery Co. Pvt. Ltd.

Unit: mm

Hose reel
Weight : 50 kg



Width : 204

Suction pipe
Weight : 34 kg

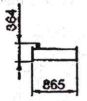

Width : 290

Suction pipe
Weight : 33 kg



Width : 290

Step
Weight : 39 kg

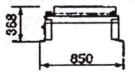

Width : 400

Step
Weight : 37 kg

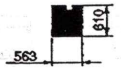

Width : 422

Step
Weight : 48 kg

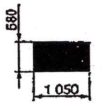

Width : 342

Engine unit
Weight : 26 500 kg

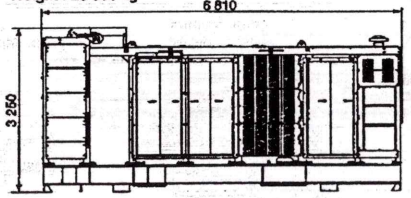

Width : 2 670

Air cleaners and muffler assembly
Weight : 1 490 kg

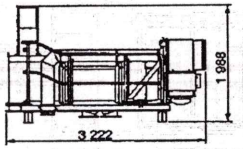

Width : 2 520

Suction manifold
Weight : 422 kg

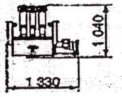

Width : 1 380

Reserve tank (coolant)
Weight : 118 kg

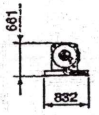

Width : 913

Bracket
Weight : 13 kg



Width : 125

Bracket
Weight : 13 kg

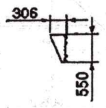

Width : 125

Door
Weight : 29 kg

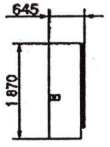

Width : 74

Counterweight
Weight : 39 900 kg

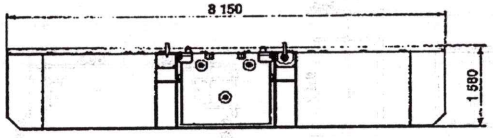

Width : 1 450

Reserve tank (engine oil)
Weight : 155 kg

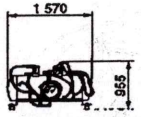

Width : 543

Bolts
Weight : 30 kg x 8

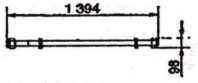

Width : 100

Washers
Weight : 0.8 kg x 60



Width : 20

Bolts
Weight : 9.3 kg x 60

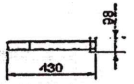

Width : 85

Others parts

Cover 1	1	1 800	275	780	34
Cover 2	1	620	80	529	10
Cover 3	1	720	20	262	5
Cover 4	2	985	30	355	9.5
Side Walk 1	1	1 530	415	1 290	59
Side Walk 2	1	1 360	407	1 290	49
Side Walk 3	1	1 720	690	1 290	95
Side Walk 4	1	2 000	682	1 290	123
Side Walk 5	1	1 820	620	1 220	65
Side Walk 6	1	2 360	682	1 810	226
Side Walk 7	1	2 220	683	2 170	218
Side Walk 8	1	2 560	820	2 510	329
Side Walk 9	1	2 590	681	2 510	329
Side Walk 10	1	2 010	677	2 150	250
Side Walk 11	1	2 430	677	1 810	223
Side Walk 12	1	2 040	869	1 810	254
Side Walk 13	1	1 700	680	1 810	184
Side Walk 14	1	3 190	866	1 230	176
Side Walk 15	1	997	630	1 210	71
Side Walk 16	1	804	997	1 410	54
Side Walk 17	1	1 940	646	1 230	107
Handrail 1	1	710	50	409	6
Handrail 2	1	2 460	50	1 460	22
Handrail 3	1	1 960	419	1 280	36
Handrail 4	1	2 600	364	1 280	38
Handrail 5	1	1 720	261	1 090	17
Handrail 6	1	1 720	261	1 670	19
Handrail 7	1	2 920	285	1 020	32
Handrail 8	1	1 480	223	1 020	17
Handrail 9	1	3 080	285	1 020	33
Handrail 10	1	780	280	1 010	16
Handrail 11	1	2 360	97	1 010	60
Handrail 12	1	496	173	1 020	16
Handrail 13	1	625	217	1 850	20
Handrail 14	1	611	386	1 010	16
Handrail 15	1	937	50	1 310	16
Handrail 16	1	663	386	1 010	16
Handrail 17	1	2 360	55	1 010	30
Handrail 18	2	2 610	199	1 010	23
Handrail 19	1	3 430	261	1 010	39
Handrail 20	1	1 690	316	697	16

Tata Hitachi Construction Machinery Co. Pvt. Ltd.

UNDERCARRIAGE

Unit: mm

Support
Weight : 87 kg

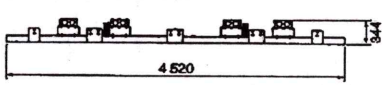

Width : 108

Ladder
Weight : 18 kg

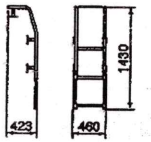

Step
Weight : 11 kg



Width : 200

Track side frame assembly
Weight : 37 600 kg

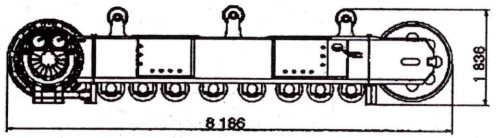

Width : 2 315

Track links

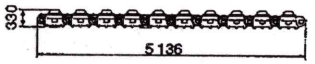

Weight : 5 100 kg Width : 1 270

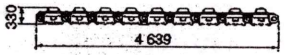

Weight : 4 600 kg Width : 1 270

Stopper
Weight : 14 kg

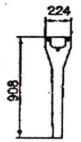

Width : 25

Track center frame assembly
Weight : 31 500 kg

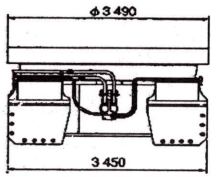

Width : 5 530

Bolts
Weight : 6.9 kg x 68

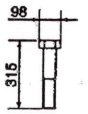

Width : 85

Washers
Weight : 6.3 kg x 68

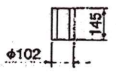

Width : 102

Others parts

Cover 1	1	2 370	799	831	115
Cover 2	2	2 180	493	1 070	101
Cover 3	1	2 180	547	852	80

Contract No. 32/2/2010-Elec/Stores/RLY/96 Dt. 12/09/2012
Page 298
Annexure - s

LOADER ATTACHMENTS

Unit: mm

Ladder
Weight : 19 kg

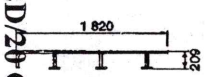

Width : 470

Ladder
Weight : 9 kg



Width : 470

Boom assembly
Weight : 27 000 kg

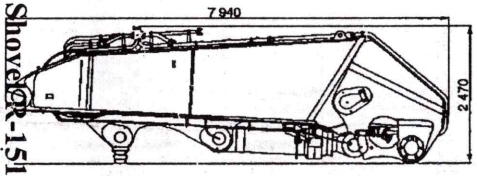

Width : 2 570

Boom cylinders
Weight : 4 315 kg x 2

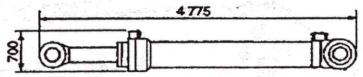

Width : 560

Arm cylinder
Weight : 2 720 kg

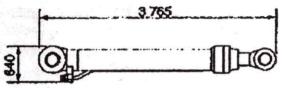

Width : 530

Arm assembly
Weight : 13 300 kg

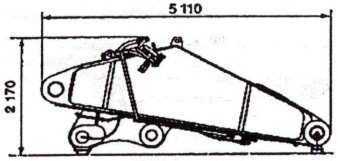

Width : 2 900

Bucket cylinders
Weight : 2 420 kg x 2

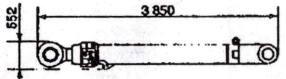

Width : 885

Front bucket assembly
Capacity ; 21.0 m³ (heaped)
Weight : 13 760 kg

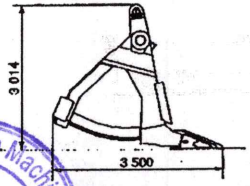

Width : 3 995

Rear bucket assembly
Weight : 14 740 kg

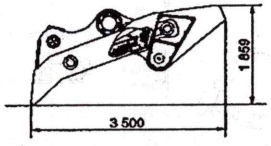

Width : 4 162

Others parts

Description	Q'ty	L	W	H	Weight : kg
Handrail 1	2	3 540	50	867	28

BACKHOE ATTACHMENTS

Unit: mm

Boom assembly
Weight : 31 600 kg

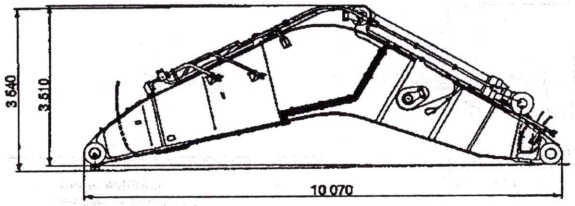

Width : 2 540

Boom cylinders
Weight : 4 500 kg x 2

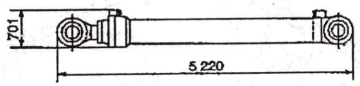

Width : 560

Clamp assembly
Weight : 27 kg

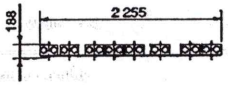

Width : 65

Arm assembly
Weight : 23 700 kg

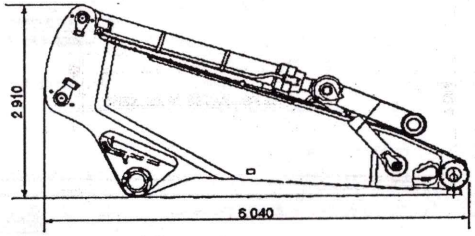

Width : 2 110

Bucket assembly
Capacity ; 22.0 m³ (SAE, PCSA heaped)
Weight : 18 800 kg

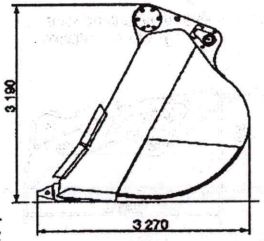

Width : 3 910

Teeth
Weight : 96 kg x 6

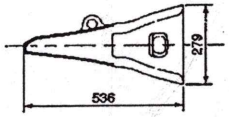

Width : 272

Pin
Weight : 4.2 kg x 6

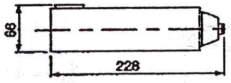

Width : 61

Others parts

Description	Q'ty	L	W	H	Weight : kg
Handrail 1	2	1 900	50	917	16

Contract No. CIL/C2D/20 Cum EHF Shovel/R-151/299 Date:12/08/2025 Page 299

Hitachi Construction Machinery Co. Ltd.

LIFTING CAPACITIES

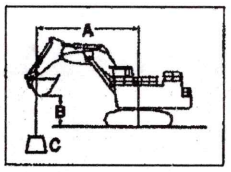

A: Load radius
B: Load point height
C: Lifting capacity

METRIC MEASURE

Rating over-side or 360 degrees Rating over-front Unit: 1 000 kg

Positions	Load point height	3m		4.5m		6m		7.5m		9m		10.5m		12m		
	13 m					*29.5	*29.5							*15.4	*15.4	15.8
	12 m					*31.0	*31.0							*14.9	*14.9	16.3
EX3600-6	10 m					*29.8	*29.8	*28.0	*28.0					*14.4	*14.4	17.1
Boom	8 m					*31.4	*31.4	*31.9	*31.9	*27.2	*27.2			*14.5	*14.5	17.6
BE-boom 9.6 m	6 m			*44.4	*44.4	*39.5	*39.5	*36.5	*36.5	*32.8	*32.8			*15.0	*15.0	17.7
Arm	4 m			*79.6	*79.6	*59.0	*59.0	*43.7	*44.3	37.7	*38.1	*26.5	*26.5	*16.1	*16.1	17.5
BE-arm 4.5 m	2 m			76.6	80.8	55.6	*62.1	41.6	*48.9	36.1	*43.3	*27.6	*27.6	*17.8	*17.8	17.1
Bucket																
SAE, PCSA 22.0 m³	-2 m	*62.8	*62.8	*66.9	*66.9	52.5	*52.6	*39.0	*39.0	*30.8	*30.8					
CECE 19.2 m³	-4 m	*58.1	*58.1	*51.5	*51.5	*40.0	*40.0	*23.8	*23.8							
	-5 m	*45.1	*45.1	*41.0	*41.0	*30.3	*30.3									

Notes:
1. Ratings are based on SAE J1097.
2. Lifting capacity of the EX Series does not exceed 75% of tipping load with the machine on firm, level ground or 87% full hydraulic capacity.
3. The load point is a hook (not standard equipment) loaded on the back of the bucket.
4. *Indicates load limited by hydraulic capacity.

Tata Hitachi Construction Machinery Co. Pvt. Ltd.

These specifications are subject to change without notice.
Illustrations and photos show the standard models, and may or may not include optional equipment, accessories, and all standard equipment with some differences in color and features.
Before use, read and understand the Operator's Manual for proper operation.

CHALO DESH BANAYE

TATA HITACHI

Reliable solutions

Operation and Maintenance Manuals in accordance with IS/ISO 6750 Part-1 and ISO 6750 Part-2, with copies in CDs as stipulated in clause A.3

Clause D.10.2 (I) Technical Details:

Tender No CIL/C2D/20 Cum EHF Shovel/R-151/394 Date: 02.11.2023

The required Operation and Maintenance Manuals will be supplied along with machine as per NIT terms and conditions.

Tata Hitachi Construction Machinery Co. Pvt. Ltd.

Shipping weight of components - Hitachi EX3600E-6 Face Shovel				
Sl No	Component	Unit Weight (kg)	Qty	Total Weight (Kg)
1	Cab assembly	1,750	1	1,750
2	Bed (left) assembly	9,270	1	9,270
3	Switchbox	33	1	33
4	Main frame assembly	41,600	1	41,600
5	Step	37	1	37
6	Folding stairs	773	1	773
7	Box assembly	869	1	869
8	Handrail	17.5	1	17.5
9	Handrail	22.5	1	22.5
10	Bed (right) assembly	11,700	1	11,700
11	Hose reel	50	1	50
12	Suction pipe	34	1	34
13	Suction pipe	33	1	33
14	Step	39	1	39
15	Step	37	1	37
16	Step	48	1	48
17	Bracket	13	2	26
18	Door	29	1	29
19	Counterweight	39,900	1	39,900
20	Support	87	1	87
21	Ladder	18	1	18
22	Step	11	1	11
23	Track side frame assembly	37,600	2	75,200
24	Track links	5,100	2	10,200
25	Track links	4,600	2	9,200
26	Stopper	14	1	14
27	Track center frame assembly	31,500	1	31,500
28	Bolts	6.9	68	469.2
29	Washers	6.3	68	428.4
30	Ladder	19	1	19

Tata Hitachi Construction Machinery Co. Pvt. Ltd.

TATA HITACHI CONSTRUCTION MACHINERY CO. PVT. LTD. Bengaluru

31	Ladder	9	1	9
32	Boom assembly	27,000	1	27,000
33	Boom cylinders	4,315	2	8,630
34	Arm cylinder	2,720	1	2,720
35	Arm assembly	13,300	1	13,300
36	Bucket cylinders	2,420	2	4,840
37	Front bucket assembly	13,760	1	13,760
38	Motor unit assembly	22,500	1	22,500
		Total Weight *		**3,26,174**

Note* Total weight excludes hydraulic oil of system and tank, control cabinet, transformer, local items fitments

Tata Hitachi Construction Machinery Co. Pvt. Ltd.

TATA HITACHI CONSTRUCTION MACHINERY Co. Pvt. Ltd. TATA HITACHI Bengaluru

12/08/2025 12/08/25